ALL DIMENSIONS ARE IN MM

FIRST ANGLE PROJECTION

COPY RIGHT AND CONFIDENTIAL
The information on this document is the property of BHARAT HEAVY ELECTRICALS LIMITED
it must not be used directly or indirectly in any way deterimental to the interest of the company.

# SINGARENI COLLIERIES COMPANY LIMITED

## 2 X 600 MW SINGARENI TPP

# TECHNICAL SPECIFICATION

# FOR CONTROL VALVES (WITHOUT FDV-14)

# WITH ACCESSORIES

# (Pneumatically operated)

| JOB NO. 381 | TITLE TECHNICAL SPECIFICATION FOR CONTROL VALVES (WITHOUT FDV-14) WITH ACCESSORIES (Pneumatically operated) | DOC. NO. PE-TS-381-145-I 004 |
|---|---|---|
| BHEL | BHARAT HEAVY ELECTRICALS LTD<br>POWER SECTOR<br>PROJECT ENGINEERING MANAGEMENT<br>NOIDA | DEPT CODE I |

| | NAME | SIGN | DATE |
|---|---|---|---|
| DESN | AW | | 14.03.2013 |
| CHD | MK | | 14.03.2013 |
| APPD | ABS | | 14.03.2013 |

spectit.dwg

1.0 The tender document contains three (3) volumes. The bidder shall meet the requirements of all the three volumes.

1.1 **Volume-I (CONDITIONS OF CONTRACT)**

This consists of four parts as below :-

Volume-IA : This part contains instructions to bidders for making bids to BHEL.

Volume-IB : This part contains general commercial conditions of the tender & includes provision that vendor is responsible for the quality of item supplied by their sub-vendors.

Volume-IC : This part contains special conditions of contract.

Volume-ID : This part contains commercial conditions for erection & commissioning site work, as applicable.

1.2 **Volume-II TECHNICAL SPECIFICATIONS**

Technical requirements are stipulated in Volume-II which comprises of :-

Volume-IIA : General Technical Conditions

Volume-IIB : Technical Specification including Drawings, if any.

1.2.1 **Volume-IIB**

This volume is sub-divided into following sections :-

Section-A : This section outlines the scope of enquiry.

Section-B : This section provides "Project Information".

Section-C : This section indicates technical requirements specific to the contract, not covered in Section-D.

Section-D : This section comprises of technical specifications of equipments complete with data sheet A, B and C.

**Data Sheet - A** specifies data and other requirements pertaining to the Equipment.

**Data Sheet - B** Specifies data to be filled by the bidder (Data Sheet-B is contained in Volume-III).

**Data Sheet - C** Indicates data/documents to be furnished after the award of contract as per agreed schedule by the vendor (as applicable).

1.2.2 **Volume-III TECHNICAL SCHEDULES**

This volume contains technical schedules and Data Sheets-B, which are to be duly filled by the bidder and the same shall be furnished with the technical bid as per instructions given in Document No. PE-SS-999-100-Q-002 in Volume-III.

2.0 The requirements mentioned in Section-C / Data Sheets-A of section-D shall prevail and govern in case of conflict between the same and the corresponding requirements mentioned in the descriptive portion in Section-D.

| PARTICULARS | PREPARED BY | APPROVED BY |
|---|---|---|
| NAME | V M RAO | C L ABBEY |
| DESIGNATION | DGM | AGM & MR |
| SIGN. & DATE | | |

# CONTENTS

## VOL-II B


| SECTION | TITLE | NO. OF SHEET(S) |
|---|---|---|
| A | Scope of Enquiry | 1 |
| B | Project Information | 12 |
| C | Specific Technical Requirements | 3 |
| | Typical Hook-up Diagram for Control valve | 1 |
| | Customer Specification | 7 |
| D | Equipment specification (PES-145-06) | 15 |
| | Data sheets A & B for Control Valves & Accessories | 62 |
| | Data sheets C for Control Valves & Accessories | 3 |
| | Quality Plan for Control Valves | 5 |
| | Bill of Quantity | 2 |
| | Spares | 1 |
| | Schedule of submission of drawings/ documents equipment manufacture, inspection and dispatch. | 1 |

# CONTENTS

## VOL- III


| SECTION | TITLE | NO. OF SHEET(S) |
|---|---|---|
| 1. | COMPLIANCE CERTIFICATE | 1 |
| 2. | SCHEDULE OF PRICES | 2 |
| 3. | SCHEDULE OF UNIT PRICES | 1 |
| 4. | CV TEST CHARGES | 1 |
| 5. | INSPECTION SCHEDULE | 1 |

**SINGARENI COLLIERIES COMPANY LIMITED**
**2 X 600 MW SINGARENI**

TECHNICAL SPECIFICATION
FOR

# CONTROL VALVES (WITHOUT FDV-14)

**WITH ACCESSORIES**
(Pneumatically Operated)

**VOLUME II-B**

SPECIFICATION No: **PE-TS-381-145-I 004**

BHARAT HEAVY ELECTRICALS LIMITED
POWER SECTOR
PROJECT ENGINEERING MANAGEMENT DIVISION
NOIDA, INDIA

# SECTION – A

# SCOPE OF ENQUIRY

# SCOPE OF ENQUIRY

## 1.0 SCOPE

.1 This specification covers the Design, Manufacture, Inspection and Testing at manufacturer's works, proper packing for transportation and delivery to site of the Control Valves with Pneumatic Actuator along with Accessories, Start-up/Commissioning and Mandatory Spares as mentioned in different sections of this specification for **SCCL TPP, 2 X 600 MW.**

.2 The quality plan enclosed forms the minimum requirement but not limited to be adhered to by the bidder.

.3 The enquiry shall be operated in '"**COMPLAINCE MODE**" means bidder to comply with the requirement of specification, quality plan, delivery schedule, quantities, start-up/commissioning spares, mandatory spares, recommended spares etc, and as a token of acceptance of the same, following formats to be signed, stamped with company seal and submitted for the project.

a) Compliance certificate
b) Quality plan
c) Schedule of price, unit prices, inspection schedule
d) Schedule of submission of drawings / documents, equipment manufacture inspection and dispatch

.4 **No separate technical offer, data sheets to be submitted with the bid. Any such document shall not be taken cognizance of, and document (Compliance certificate) at 3 above shall be final and binding. Data sheets shall be furnished by the successful bidder (vendor), only after the award of contract & shall be subject to Purchaser's Approval.**

.5 **Bidder to note that CV test is required to be conducted on one type per size, CV value. Bidder to group such valves and indicates the same along with the price bid. Unpriced portion to be submitted to engineering.**

## 2.0 GENERAL TECHNICAL INSTRUCTIONS

1 It is not the intent here to specify all the details of design and manufacture. However, the equipment shall conform in all respects to high standard of design, engineering and workmanship and shall be capable of performing the required duties in a manner acceptable to the customer / consultant, who will interpret the meaning of drawing and specification and shall be entitled to reject any component or material which in his judgment is not in full accordance herewith.

2 The omission of specific reference to any component / accessory necessary for the proper performance of the equipments shall not relieve the supplier of the responsibility of providing such facilities to complete the supply within the quoted prices.

3 BHEL's / Customer's representatives shall be given access to the shop in which the equipments are being manufactured or tested and all test records shall be made available to them.

4 The Equipment covered under this specification shall not be dispatched unless the same have been finally inspected, accepted and Material Dispatch Clearance Certificate (MDCC) is issued by BHEL / CUSTOMER.

# SECTION – B

# PROJECT INFORMATION

# PROJECT INFORMATION

| CLAUSE NO. | PROJECT INFORMATION |
|---|---|
| **1.00.00** | **BACKGROUND**<br><br>The Singarenis Collieries Company Limited is a government coal mining companies jointly owned by the Government of Andhra Pradesh and Government of India on a 51:49 equity basis<br><br>The present proposal is for setting up of a coal based Singareni Thermal Power Project (2x600 MW) to be owned by The Singareni Collieries Company Limited, which is A Government Company. |
| 1.01.00 | **LOCATION AND APPROACH**<br><br>The Singareni TPP is located near Pegadapalli village, Jaipur Mandal, District Adilabad of Andhra Pradesh. The latitude and longitude of Site are 18$^o$ 48' 30" to 18$^o$ 50' 35" and 79$^o$ 34' 00" to 79$^o$ 35' 30" respectively. The Site is 14.6 Km from nearest town Mancherial and 4.6 Km from State Highway. Distance from NH-16 (Nirmal-Chinnur section) is 500M.<br><br>Nearest railway station is Mancherial railway station on Nagpur-Kazipet main rail line of South Central Railway, located at a distance of about 14.6 kms.<br><br>Nearest airport is Shamshabad Airport, Hyderabad at a distance of about 250KM.<br><br>Vicinity Plan of the project is placed at **Annexure-I** |
| 1.02.00 | **LAND REQUIREMENT**<br><br>About 490 hectares of land has been identified for the plant, CHP, water reservoir, Staff colony, ash dump area, Coal conveyor corridors, water pipelines and Green belts. |
| 1.03.00 | **WATER**<br><br>Water requirement has been assessed as 3700 cum/hr.<br><br>Irrigation & CAD Deptt., Govt. of Andhra Pradesh has allocated 1.0 TMC of water per annum from Pranahita Chevella Lift Irrigation Scheme vide Memo No. 17556/Maj.Irr.VIII(1)/08 dated 02.07.2008 (Annexure-2.1).<br><br>During the no-flow period in the river, Govt. of Andhra Pradesh, Ground Water Department vide their letter No. 157/T/2008 dated 07.08.2008 addressed to SCCL have accorded approval for drawal of 18 MGD (3409 cum/hr) water through infiltration galleries in River Godavari at Shetpally Village for the project. |

SCCL has approached Govt. of Andhra Pradesh vide letter dated 29.08.09 to get allocation of 2 TMC of water from Sripada-Yellempalli Project including already allocated 1 TMC of water for the Power Project.

Suitable intake system will be developed at a location as may be suggested by Ground Water Deptt., Govt. of Andhra Pradesh.

1.04.00 **COAL AVAILABILITY AND TRANSPORTATION**

1.04.01 **Coal Availability**

Coal requirement for 1200 MW capacity has been assessed as 4.784 mtpa.

Coal will be sourced mainly from Srirampur OCM of SCCL and nearby coalmines of SCCL.

1.04.02 **Coal Transportation**

Coal will be linked from Srirampur OCM & nearby coalmines of SCCL. (-) 200 mm size Coal will be transported by Rail / MGR system from mines to plant site

As a standby arrangement coal shall also be transported by road and the arrangement shall be made in Plant CHP to receive the coal through trucks by designing suitable ground hopper.

1.04.03 **Coal Quality Parameters and Fuel Oil Characteristics**

The tentative Coal quality parameters and Fuel Oil Characteristics are enclosed as **Annexures-II-1 and II-2** to this subsection.

1.05.00 **CAPACITY & POWER EVACUATION**

Power generated is proposed to be stepped upto 400 kV by generator transformer and will be evacuated through the double circuit overhead transmission system.

1.06.00 **METEOROLOGICAL DATA**

Important meteorological data from nearest observatory at **Ramagundam** is placed at **Annexure - III.**

1.07.00 **PLANT WATER SCHEME**

The Plant water scheme is described below.

1.07.01 **Condenser Cooling (CW) Water System**

It is proposed to adopt re-circulating type CW system with induced draft cooling towers for the project.

1.07.02 **Equipment Cooling Water (ECW) System ( Unit Auxiliaries)**

The plant auxiliaries of Steam Generator shall be cooled by Demineralised water (DM) in a closed circuit. The primary circuit DM water shall be cooled through heat exchangers by Circulating Water tapped from CW system in a closed secondary circuit. The hot secondary circuit cooling water shall be cooled in the induced draft cooling towers and shall be returned back to the system.

1.07.03 **Station Auxiliaries Cooling Water System**

The station auxiliaries such as Air compressors, compressors of ash handling plant, Cooling water circuit of Air Conditioning systems of Main Plant and Service Building, compressor of mill reject system etc. shall be cooled by separate cooling water system using separate set of pumps and cooling towers.

1.07.04 **Ash Water System**

(a) It is proposed to operate ash water system in a closed circuit. The ash water from the ash dyke shall be recirculated. During re-circulation mode, the make up to the ash water system (to compensate for the ash water blow down and evaporation loss in ash dyke) shall be supplied from CW blow down.

(b) During initial stage when decanted ash water is not available, the ash water system shall be operated in once through mode and make up water to ash water system shall be given from CW blowdown as well as raw water system.

(c) Considering total ash handling plant water requirement of 1100 Cu.M/hr. (excluding the water required for cooling of air compressors and vacuum pumps but inclusive of seal water of ash slurry pumps during re-circulation mode operation, it is expected that about 930 $M^3$/hr of decanted ash water shall return to the ash handling system after accounting for evaporation loss.

1.07.05 **Other Miscellaneous Water Systems**

(a) CW system blow down water shall be used for meeting the Fly ash and bottom ash system requirement. Clarified water shall be used for service water system. The service (wash water) water collected from various areas shall be treated using oil water separators, tube settlers, coal settling pits etc.

as per requirement and treated water from liquid effluent treatment plant shall be recycled back to the service water system for re-use.

(b) The drinking water requirement of the plant shall be provided from water treatment plant.

(c) Steam Cycle make-up water, makeup to the primary circuit of ECW (unit auxiliaries) system, boiler fill water and makeup to the hydrogen generation plant shall be provided from existing Demineralising plant.

(d) The quality of Raw water and Clarified water is enclosed with this sub-section.-

1.08.00 **Criteria for Wind Resistant Design of Structures and Equipment**

All structures and equipment of the power plant, including plant auxiliary structures and equipment, shall be designed for wind forces as given in Sub-Section- D-01, Part-B, Section-VI, i.e. Technical Specification for Civil and Structural Works.

1.09.00 **Criteria for Earthquake Resistant Design of Structures and Equipment**

All power plant structures and equipment, including plant auxiliary structures and equipment shall be designed for seismic forces as given in Sub-Section- D-01, Part-B, Section-VI, i.e. Technical Specification for Civil and Structural Works.

## RAW WATER ANALYSIS

| S.No | Constituent | As | mg/l | |
|---|---|---|---|---|
| | | | Source-1 | Source-2 |
| 1 | Calcium | $CaCo_3$ | 68.6 | 117.6 |
| 2 | Magnesium | $CaCo_3$ | 68.6 | 137.2 |
| 3 | Sodium+ Potassium | $CaCo_3$ | 34 + 66 | 4 + 8 |
| | Total cations | | | |
| a) | Hexavalent Chromium | $Cr^{+6}$ | BDL | BDL |
| b) | Calcium | Ca | 27.4 | 47 |
| c) | Magnesium | Mg | 16.6 | 33.3 |
| d) | Total chromium | Cr | 0.159 | 0.048 |
| e) | Copper | Cu | BDL | BDL |
| f) | Magnesium | Mn | BDL | 0.078 |
| g) | Lead | Pb | 0.058 | 0.074 |
| h) | Zinc | Zn | BDL | BDL |
| i) | Aluminium | Al | BDL | BDL |
| 4 | Total alkalinity | - | 119.38 | 326 |
| 5 | $HCO_3$ | $CaCo_3$ | 119.38 | Nil |
| 6 | Chloride | Cl | 43 | 67 |
| 7 | Sulphate | $SO_4$ | 23 | 39 |
| | Total Anions | | | |
| | Flourides | F | 0.77 | 0.814 |
| | Nitrites | $NO_2$ | BDL | 0.016 |
| | Nitrates | $NO_3$ | 0.04 | 0.06 |
| | Sulphide | $S^{-2}$ | BDL | BDL |
| 8 | Silica, Reactive | Si | 8.4 | 16.58 |
| 9 | Iron (Total) | Fe | 0.20 | 0.415 |
| 10 | pH | | 8.4 | 7.6 |
| 11 | Organics ($KMnO_4$) | | 0.012 | 0.20 |
| 12 | Turbidity | NTU | 0.80 | 2.5 |
| 13 | Temperature | $0^C$ | 25 | 25 |

BDL- Below Detective Limit

## CLARIFIED WATER ANALYSIS

| S.No | Constituent | As | mg/l |
|---|---|---|---|
| 1 | Calcium | $CaCo_3$ | 110 |
| 2 | Magnesium | $CaCo_3$ | 45 |
| 3 | Sodium & Potassium | $CaCo_3$ | 25 |
| | Total cations | $CaCo_3$ | 180 |
| 4 | $HCO_3$ | $CaCo_3$ | 120 |
| 5 | P-alkalinity | $CaCo_3$ | 0 |
| 6 | Chloride | $CaCo_3$ | 20 |
| 7 | Sulphate | $CaCo_3$ | 40 |
| | Total Anions | $CaCo_3$ | 180 |
| 8 | Silica, Reactive | Si | 10 |
| 9 | Iron (Total) | Fe | 0.3 |
| 10 | pH | | 7.0-8.0 |
| 11 | Turbidity | NTU | 2 |
| 13 | Temperature | $0^C$ | 15-36 |

## ANALYSIS OF DM WATER TO BE USED FOR MAKE-UP WATER TO CONDENSER

| Sl.No. | Characteristics | Value |
|---|---|---|
| 1. | Silica (Max.) | 0.02 ppm as Sio2 |
| 2. | Iron as Fe | Nil |
| 3. | Total hardness | Nil |
| 4. | pH value | 6.8 to 7.2 |
| 5. | Conductivity | Not more than 0.1 μs/cm excluding the effects of free $CO_2$ |

## VICINITY PLAN

**ANNEXURE- I**

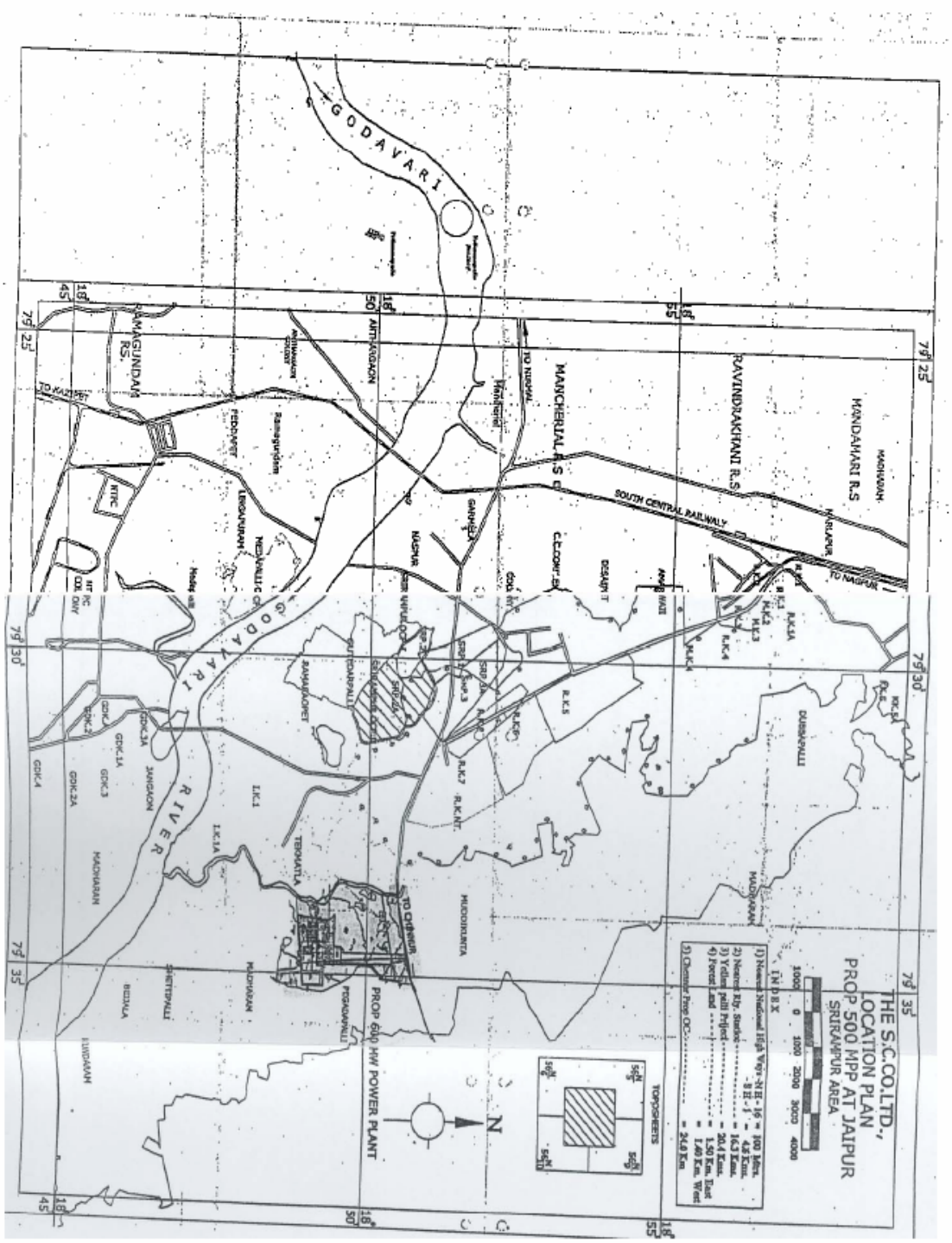

**ANNEXURE-II-1 (PAGE 1 OF 2)**

## TABLE – 1

## COAL CHARACTERISTICS

| Sl. No. | Characteristics | Unit | Range of 95% Coal supplies | | | Range of (5%)Coal supplies |
|---|---|---|---|---|---|---|
| | | | Design Coal | Worst Coal | Best Coal | |
| 1 | 2 | 3 | 4 | 5 | 6 | 7 |
| **1.0** | **PROXIMATE ANALYSIS** (As received basis) | | | | | |
| 1.1 | Total Moisture | % | 7.62 | 6.62 | 8.04 | 7.50- 12.00 |
| 1.2 | Ash | % | 30.72 | 37.71 | 29.32 | 30.00 -48.00 |
| 1.3 | Volatile Matter | % | 27.95 | 25.83 | 26.37 | 25.00 -30.00 |
| 1.4 | Fixed Carbon | % | 33.71 | 29.84 | 36.27 | 35.00 -25.00 |
| **2.0** | **ULTIMATE ANALYSIS** (As received basis) | | | | | |
| 2.1 | Carbon | C% | 49.41 | 41.63 | 49.38 | 40.00 – 55.00 |
| 2.2 | Hydrogen | $H_2$% | 2.83 | 2.50 | 3.93 | 2.50 - 4.00 |
| 2.3 | Nitrogen | $N_2$% | 0.85 | 0.81 | 1.12 | 0.50- 1.20 |
| 2.4 | Oxygen (by difference) | $N_2$% | 7.96 | 8.27 | 7.81 | 6.00 – 9.00 |
| 2.5 | Sulphur | S% | 0.42 | 0.69 | 0.21 | 0.20 - 1.00 |
| 2.6 | Carbonates | $CO_2$% | 0.19 | 1.77 | 0.19 | 0.19 – 1.77 |
| 2.7 | Phosphorous | $P_2$% | 0.00 | 0.00 | 0.00 | 0.00 |
| 2.8 | Total Moisture | $H_2O$% | 7.62 | 6.62 | 8.04 | 7.50 -12.00 |
| 2.9 | Ash | % | 30.72 | 37.71 | 29.32 | 30.00 -48.00 |
| 2.10 | Gross Calorific Value (as received basis) | KCal/Kg | 4529 | 3786 | 4724 | 4800–3600 |
| 2.11. | Hard Grove Index | | 52 | 60 | 48 | 45 -70 |
| 2.12 | YGP index | | 69.80 | 61.60 | 69.80 | 61.60 – 69.80 |

**ANNEXURE-II-1 (PAGE 2 OF 2)**

| Sl. No. | Characteristics | Unit | Range of 95% Coal supplies | | | Range of (5%)Coal supplies |
|---|---|---|---|---|---|---|
| | | | Design Coal | Worst Coal | Best Coal | |
| 1 | 2 | 3 | 4 | 5 | 6 | 7 |
| **3.0** | **ASH ANALYSIS** | | | | | |
| 3.1 | Silica ($SiO_2$) | % | 67.36 | 66.11 | 59.966 | 55.00- 70.00 |
| 3.2 | Alumina ($Al_2O_3$) | % | 21.28 | 24.48 | 23.756 | 20.00 – 26.00 |
| 3.3 | Iron Oxide ($Fe_2O_3$) | % | 8.11 | 5.57 | 6.854 | 5.00 – 10.00 |
| 3.4 | Titania ($TiO_2$) | % | 0.00 | 0.00 | 0.00 | 1.00 – 1.50 |
| 3.5 | Phosphoric ($P_2O_5$) Anhydride | % | 0.00 | 0.00 | 0.00 | 0.0 – 0.50 |
| 3.6 | Lime (CaO) | % | 1.60 | 2.32 | 5.774 | 1.50 - 8.00 |
| 3.7 | Magnesia (MgO) | % | 0.00 | 0.00 | 0.00 | 0.00 – 3.00 |
| 3.8 | Sulphuric ($SO_3$) Anhydride | % | 0.00 | 0.00 | 0.00 | 0.40 – 0.80 |
| 3.9 | Sodium Oxide ($Na_2O$) | % | 0.20 | 0.15 | 0.192 | 0.10 – 0.35 |
| 3.10 | Balance Alkalies (by difference) | % | 1.45 | 1.37 | 3.46 | 1.25 – 4.00 |
| **4.0** | **ASH FUSION RANGE (Reducing Atmosphere)** | | | | | |
| 4.1 | Initial Deformation Temperature (IDT) | °C | 1400 | 1380 | 1342 | 1150 – 1400 |
| 4.2 | Hemispherical Temperature | °C | 1400 | 1400 | 1400 | 1300 - 1400 |
| 4.3 | Flow Temp. | °C | 1400 | 1400 | 1400 | 1400 - 1400 |

**ANNEXURE-II-2 (PAGE 1 OF 2)**

**FUEL OIL CHARACTERISTICS**

| Sl. No. | Characteristics | Heavy Furnace Oil Grade HV IS-1593-1982 | Low Sulphur Heavy Stock (LSHS) IS-11489-1985 | Heavy Petroleum Stock (HPS) IS-11489-1985 |
|---|---|---|---|---|
| 1. | Total sulphur content | 4.5% Max. | 1.0% Max. | 4.5% Max. |
| 2. | Gross calorific value (KCal/kg) | of the order of 10,000 | of the order of 10,000 | of the order of 10,000 |
| 3. | Flash Point (Min) | 66 deg C | 66 deg C | 72 deg C |
| 4. | Water content by volume (Max) | 1.0% | 1.0% | 1.0% |
| 5. | Sediment by weight (Max) | 0.25% | 0.25% | 0.25% |
| 6. | Asphaltene content by weight (Max.) | 2.5% | 2.5% | 2.5% |
| 7. | Kinematic viscosity in Centistokes at - (Max) | 370 at 50deg C | 100 at 100deg C | 100 at 100deg C |
| 8. | Ash Content by weight (Max.) | 0.1% | 0.1% | 0.1% |
| 9. | Acidity (inorganic) | Nil | Nil | Nil |
| 10. | Pour Point (Max.) | 57 deg C | 66 deg C | 72 deg C |
| 11. | Sodium content | — | — | 100 ppm |
| 12. | Vanadium content | 25 ppm | 25 ppm | 25 ppm |
| 13. | Specific heat below pour point (KCal/Kg °C) | | 0.65 | |

**ANNEXURE-II-2 (PAGE 2 OF 2)**

## LIGHT DIESEL OIL CHARACTERISTICS

## AS PER IS 1460-2000

| | Characteristics | LDO |
|---|---|---|
| 1. | Pour Point (max) | 21 °C & 12°C for Summer and Winter respectively |
| 2. | Kinematic viscosity in centistokes at 40 deg.C | 2.5 to 15.7 |
| 3. | Sediment percent by mass (max) | 0.10 |
| 4. | Total sulphur percent by mass (max) | 1.8 |
| 5. | Ash percentage by mass (max) | 0.02 |
| 6. | Carbon residue (Rans bottom) percent by pass (max.) | 1.50 |
| 7. | Acidity inorganic | Nil |
| 8. | Flash point (Min.) - Pensky Martens | 66 deg.C |
| 9. | Copper strip corrosion for 3 hours at 100°C | Not worse than No. 2 |
| 10. | Water content, % by volume (max) | 0.25 |

# CLIMATOLOGICAL TABLE

ANNEXURE-III

(PAGE 1 OF 1)

## जलवायवी सारणी
## CLIMATOLOGICAL TABLE

स्टेशन : रामगुंडम
STATION : Ramgundam

अक्षांश LAT 18°46′ N  देशांतर LONG 79°26′ E  समुद्री तल मध्य से ऊँचाई HEIGHT ABOVE M. S. L. भीटर 156 METRES

1951 से 1980 तक के प्रेक्षणों पर आधारित
BASED ON OBSERVATIONS FROM 1951 TO 1980

| माह / MONTH | स्टेशन का सतह दाब / STATION LEVEL PRESSURE (एच.पी.ए. / hPa) | वायु तापमान / AIR TEMPERATURE — माध्य / MEAN: शुष्क मान / DRY BULB (डि.से. °C) | नम मान / WET BULB (डि.से. °C) | दैनिक अधिकतम / DAILY MAX (डि.से. °C) | दैनिक न्यूनतम / DAILY MIN (डि.से. °C) | माह में उच्चतम / HIGHEST IN THE MONTH (डि.से. °C) | माह में निम्नतम / LOWEST IN THE MONTH (डि.से. °C) | चरम / EXTREMES: उच्चतम / HIGHEST (डि.से. °C) | दिनांक और वर्ष / DATE AND YEAR | निम्नतम / LOWEST (डि.से. °C) | दिनांक और वर्ष / DATE AND YEAR | आर्द्रता / HUMIDITY: सापेक्ष आर्द्रता / RELATIVE HUMIDITY (प्रतिशत %) | वाष्प दाब / VAPOUR PRESSURE (एच.पी.ए. / hPa) | मेघ की मात्रा / CLOUD AMOUNT (आकाश के अष्टमांश / Oktas of sky): समस्त मेघ / ALL CLOUDS | निम्न मेघ / LOW CLOUDS | वर्षा / RAINFALL: मासिक योग / MONTHLY TOTAL (मि.मि. / mm) | वर्षा के दिनों की संख्या / NO. OF RAINY DAYS | सर्वसहित सबसे नम महीने का योग / TOTAL IN WETTEST MONTH WITH YEAR (मि.मि. / mm) | सर्वसहित शुष्कतम महीने का योग / TOTAL IN DRIEST MONTH WITH YEAR (मि.मि. / mm) | 24 घंटों की सबसे भारी वर्षा / HEAVIEST FALL IN 24 HOURS (मि.मि. / mm) | दिनांक और वर्ष / DATE AND YEAR | माध्य पवन गति / MEAN WIND SPEED (कि.मी. प्र. घं. / Kmph) |
|---|---|---|---|---|---|---|---|---|---|---|---|---|---|---|---|---|---|---|---|---|---|---|
| जनवरी JAN I | 998.1 | 20.0 | 16.4 | 30.8 | 15.8 | 33.3 | 10.9 | 35.3 | 28 1974 | 8.4 | 10 1972 | 68 | 15.9 | 1.7 | 0.8 | 7.8 | 0.5 | 53.0 1968 | 0.0 | 47.6 | 20 1979 | 4.5 |
| | 994.1 | 28.8 | 19.2 | | | | | | | | | 37 | 14.5 | 1.6 | 0.7 | | | | | | | |
| फरवरी FEB I | 996.2 | 23.0 | 18.0 | 33.9 | 18.8 | 37.1 | 13.8 | 39.4 | 29 1980 | 9.4 | 08 1949 | 60 | 16.8 | 1.7 | 0.9 | 5.1 | 0.6 | 32.4 1975 | 0.0 | 24.0 | 21 1968 | 5.3 |
| II | 991.6 | 32.3 | 20.3 | | | | | | | | | 30 | 14.1 | 1.6 | 0.8 | | | | | | | |
| मार्च MAR I | 994.4 | 26.8 | 20.2 | 37.5 | 22.3 | 40.6 | 17.4 | 42.8 | 27 1953 | 13.0 | 11 1979 | 53 | 16.3 | 1.7 | 0.8 | 12.0 | 1.0 | 71.6 1951 | 0.0 | 39.2 | 05 1970 | 6.4 |
| II | 989.5 | 35.9 | 21.6 | | | | | | | | | 25 | 14.1 | 1.6 | 1.0 | | | | | | | |
| अप्रैल APR I | 991.8 | 30.2 | 23.1 | 40.3 | 26.2 | 43.6 | 21.5 | 45.6 | 29 1973 | 15.4 | 20 1971 | 53 | 22.5 | 2.3 | 0.7 | 15.7 | 1.1 | 68.6 1962 | 0.0 | 62.0 | 24 1961 | 7.9 |
| II | 988.3 | 38.6 | 23.5 | | | | | | | | | 25 | 16.6 | 3.2 | 1.7 | | | | | | | |
| मई MAY I | 987.8 | 32.9 | 23.9 | 42.4 | 29.0 | 45.6 | 23.8 | 47.2 | 19 1948 | 20.4 | 01 1977 | 46 | 22.3 | 2.8 | 0.9 | 28.4 | 2.0 | 142.2 1977 | 0.0 | 111.2 | 01 1977 | 7.9 |
| II | 982.6 | 40.4 | 24.6 | | | | | | | | | 25 | 17.9 | 3.6 | 2.1 | | | | | | | |
| जून JUN I | 985.4 | 30.0 | 24.3 | 37.8 | 27.1 | 43.8 | 22.4 | 47.2 | 08 1953 | 18.4 | 03 1973 | 63 | 25.7 | 5.3 | 2.3 | 171.3 | 8.4 | 366.8 1956 | 0.0 | 140.7 | 20 1953 | 8.4 |
| II | 981.2 | 35.5 | 25.4 | | | | | | | | | 45 | 24.1 | 5.7 | 3.5 | | | | | | | |
| जुलाई JUL I | 985.4 | 27.0 | 24.2 | 32.5 | 24.5 | 36.8 | 22.0 | 41.0 | 06 1966 | 18.8 | 14 1973 | 79 | 28.0 | 6.8 | 3.6 | 309.2 | 15.2 | 599.6 1976 | 104.3 1970 | 130.7 | 23 1977 | 7.0 |
| II | 982.2 | 30.7 | 25.4 | | | | | | | | | 65 | 28.0 | 6.6 | 3.9 | | | | | | | |
| अगस्त AUG I | 986.4 | 28.4 | 24.1 | 31.8 | 24.2 | 35.0 | 22.2 | 37.4 | 28 1960 | 19.8 | 31 1965 | 82 | 28.1 | 6.4 | 3.6 | 243.8 | 13.8 | 487.4 1953 | 59.6 1968 | 104.4 | 21 1960 | 5.8 |
| II | 983.3 | 29.8 | 25.2 | | | | | | | | | 68 | 28.2 | 6.5 | 3.9 | | | | | | | |
| सितम्बर SEP I | 989.0 | 26.9 | 24.3 | 32.5 | 24.1 | 35.7 | 21.8 | 38.0 | 02 1968 | 17.8 | 30 1972 | 80 | 28.4 | 5.1 | 2.3 | 190.7 | 9.2 | 404.8 1966 | 65.8 1971 | 128.0 | 20 1969 | 4.8 |
| II | 985.5 | 30.2 | 25.1 | | | | | | | | | 66 | 27.7 | 5.7 | 3.2 | | | | | | | |
| अक्तूबर OCT I | 993.1 | 28.1 | 22.8 | 33.1 | 22.3 | 35.9 | 18.1 | 38.4 | 11 1957 | 15.4 | 14 1972 | 75 | 25.2 | 3.1 | 1.2 | 94.5 | 4.4 | 539.6 1973 | 0.0 | 135.8 | 24 1973 | 3.9 |
| II | 989.5 | 30.4 | 23.4 | | | | | | | | | 55 | 23.2 | 3.9 | 2.1 | | | | | | | |
| नवम्बर NOV I | 996.7 | 22.8 | 19.0 | 31.2 | 18.1 | 33.9 | 13.8 | 36.6 | 06 1977 | 9.0 | 30 1970 | 69 | 19.1 | 2.2 | 0.7 | 18.8 | 1.2 | 116.0 1962 | 0.0 | 70.2 | 05 1961 | 3.5 |
| II | 993.3 | 28.4 | 20.5 | | | | | | | | | 46 | 17.7 | 2.8 | 0.9 | | | | | | | |
| दिसम्बर DEC I | 998.5 | 19.7 | 16.3 | 29.9 | 14.9 | 32.8 | 11.0 | 34.5 | 26 1976 | 7.8 | 10 1970 | 69 | 16.0 | 1.7 | 0.5 | 9.7 | 0.6 | 109.4 1962 | 0.0 | 101.2 | 02 1966 | 3.2 |
| II | 994.8 | 27.3 | 18.8 | | | | | | | | | 41 | 14.9 | 2.0 | 0.4 | | | | | | | |
| वार्षिक योग या मध्य ANNUAL TOTAL OR MEAN I | 991.9 | 26.0 | 21.4 | 34.5 | 22.3 | 45.7 | 9.9 | 47.2 | | 7.8 | | 66 | 22.2 | 3.4 | 1.5 | 1107.0 | 58.0 | 1672.8 | 565.2 | 140.7 | | 5.7 |
| II | 987.9 | 32.4 | 22.8 | | | | | | | | | 44 | 20.1 | 3.7 | 2.0 | | | 1973 | 1952 | | | |
| वर्षों की संख्या NUMBER OF YEARS I | 30 | 30 | 30 | 30 | 30 | 30 | 30 | 33 | | 33 | | 30 | 30 | 30 | 24 | 30 | 30 | 33 | 33 | 33 | | 24 |
| II | 30 | 30 | 30 | | | | | | | | | 30 | 30 | 30 | 24 | | | | | | | |

# SECTION – C

# SPECIFIC TECHNICAL REQUIREMENTS

# CONTENTS

## VOL-II B
## (SECTION-C)


| S.NO. | TITLE | NO. OF SHEET(S) |
|---|---|---|
| 1. | Specific Technical Requirements | 3 |
| 2. | Hook-up Diagram for Control valve | 1 |
| 3. | Customer Specification: Section-VI, Part-B, Sub Section-IIIC-10 | 7 |

## SPECIFIC TECHNICAL REQUIREMENTS

The requirements in this section are specific for this project and shall over-ride the specification under section-D in case of any contradiction.

1. **All the formats in Volume-III, SCHEDULE OF SUBMISSION OF DRG./DOC. and QUALITY PLAN (BHEL Format) should filled-up and furnished with the bid, complete in all respect. In the absence of those, the bid would be considered incomplete and liable for rejection.** Catalogue, Leaflets related with the models of Control Valves as well as each Accessory must be furnished with the offer.

2. The Hook-up diagram for Control valve, attached in Section-C. the scope demarcation as indicated should be adhered. The connection details at Instrument Air valve shall be furnished to successful bidder after the award of contract.

3. Valve Body Sizes shall be quoted to take care of the specification requirements like parameters, and limitations of Fluid outlet velocities, Noise Level etc. **However Port (Trim) Sizes shall be selected to suit CV requirement for achieving percentage valve lift as per Technical Specification.**

4. Bidder to note that, **wherever downstream side of the valve is subjected to the Vacuum service, bidder to offer double Gland packing, and in that case, flow direction of working fluid shall be to close the valve**. Separate indication for the same has not been made in the data sheets-A.

5. For valves subjected to cavitation service, anti-cavitation trim shall be provided.

6. In case during erection/commissioning of the control valve, any spares are required which have not been specified in the Start-up/commissioning spares list, the same will have to be supplied by the bidder free of cost

7. Facility to adjust the maximum travel of the stem & starting point of travel shall be incorporated.

8. SS nameplate to control valve shall include Tag no./ KKS no./ Sl. No./ Body material/ size/ Press Rating/ Trim material/ Trim type/ action on air failure/ diaphragm air press at full open and close condition

9. Hand wheel shall have open/ close direction.

10. Limit switch shall be designed for 1,00,000 operations.

11. JB shall be 36 ways as per enclosed hook-up diagram.

12. The material of filter for Air Filter Regulator shall be Sintered bronze.

13. Bidder to indicate pick-up & drop out voltage for all solenoid valves.

14. Protection class for Limit switches, I/P converter and Position transmitter shall be IP-65 only.

15. All JBs and valves shall be with double compression type Ni plated brass cable glands.

16. Solenoid valve class of protection shall be IP-65.

17. All local cabling upto JBs shall be in Conduit (Flexible/Rigid).

18. The smart positioner provided with Control Valves shall be compatible with Universal Hart Calibrator.

19. SPARES: The following spares are required to be offered

**(A) Mandatory Spares:**

The items listed in list of mandatory spares attached at section-D, of this specification, are the essential spares required to be offered by the bidder, and the price for which (Lump sum as well as individual) for each item to be quoted separately under the separate heading. The format for price schedule to be filled-up by the bidder is enclosed in Volume-III

The prices for Mandatory spares indicated by the bidder shall be used for bid evaluation purposes.

Each Case / Container containing Mandatory spares shall be clearly marked or labelled on the outside with the description of the spares contained in it. When more than one items of spare parts are packed in a single Case / Carton, a general description of the contents shall be shown outside of such case, and detailed list enclosed. All Cases, Containers and Packages must be suitably marked and numbered for the purpose of identification.

**(B) Recommended Spares:**

In addition to the Mandatory spares mentioned, the bidder shall also furnish a List of Recommended spares for 3 years of normal operation of the Control valves / Accessories. The BHEL/Customer reserves the right to buy any or all of the recommended spares.

The prices of these spares will remain valid for a period of minimum 6 months after the placement of order.

**(C) Start-up & Commissioning Spares:**

Start-up and Commissioning spares are those spares, which may be required during the start-up and commissioning of the Control Valves. All start-up spares, which are supplied under this contract, shall be strictly interchangeable with the parts for which they are intended for replacements. The format for price schedule to be filled-up by the bidder is enclosed in Volume-III

The Start-up and commissioning spares indicated by the bidder shall be a part of the main Control valves supply. However bidder to indicate prices separately. The list of these spares required is enclosed in the section-D of this specification.

Bidder to indicate the service life expectancy period for the spare parts under normal working conditions. The spares shall be treated and packed for long storage, under climatic conditions prevailing at site. Small items shall be packed in sealed transparent plastic bags with desiccator's packs as necessary.

## 20. Documentation:

**(A) Along with the bids: following documents for the project**

**a) Signed and stamped compliance certificates in attached format(VOL.-III).**

**b) "Schedule of prices" and "Schedule of unit Prices" in attached format (VOL.-III).**

**c) Schedule of submission of Drg. / Doc, Equip. Manufacture, Inspection and Dispatch.**

**d) Inspection schedule**

**e) Quality Plan Duly signed and Stamped**

**(B) After the award of contract:**

The documentation as listed below for the project
6 sets of the following documents + 3 sets of CDs to be enclosed with the bids for Approval:

a. Assembly (dimensional) drawings.

b. Valve Edge preparation details.

c. Data sheet-C completely filled-up.

d. Hook-up diagram of Control Valve with Actuator & Accessories.

e. Valve & Actuator assembly dimensional drawings with weights.

f. Quality Plan duly signed and stamped.

g. All calculations like CV, Noise Level, Valve Outlet Velocity, Actuator sizing etc.

h. All relevant catalogues for the models of the valves as well as accessories finalised.

i. Bar chart to indicate the time schedule for procurement, manufacture, testing and dispatch.

**(B) Final documentation:**

The documentation as listed below will separate for respective projects

1. Category –I & IV Approved final drawings/data sheets, – 20 sets with 4 CD-ROMS
   Valve sizing calculations, Noise level calculations and
   Valve Outlet Velocity calculations.

2. Test certificates – 20 sets.

3. Operation & Maintenance Manuals for Control Valve, Actuator and all the Accessories. – 20 sets with 4 CD-ROMS

TITLE

# CONTROL VALVE HOOK-UP DIAGRAM WITH SMART POSITIONER

## SCCL TPP, 2 X 600 MW

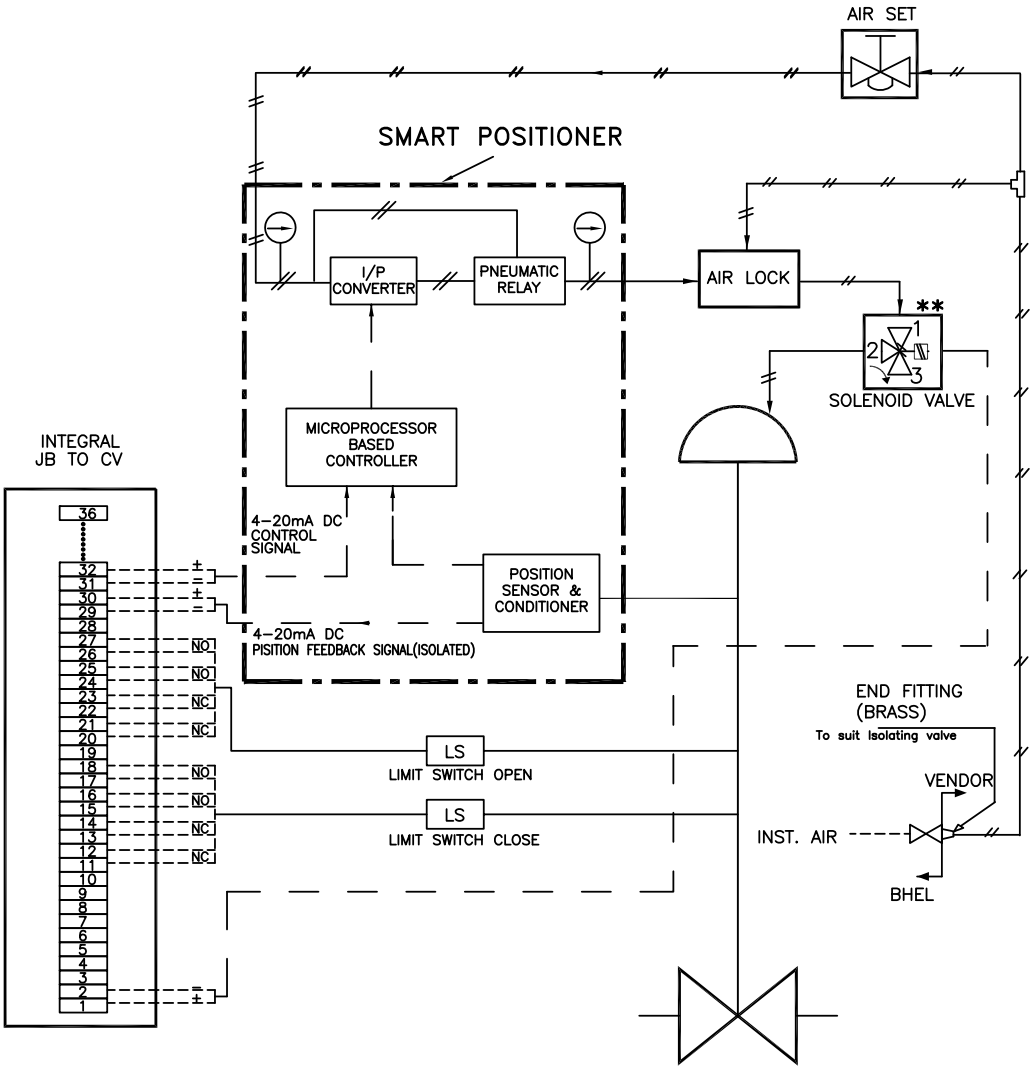


NOTE:-

1. SOLENOID VALVE WILL BE PROVIDED ONLY FOR ON/OFF DUTY VAVLVES & FOR CONTROL VALVES WHERE OPEN/CLOSE INTERLOCK IS REQUIRED AND INDICATED IN RESPECTIVE DATA SHEETS.
2. SOLENOID VALVES PORT CONDITION:
   PORT 1 & 2 SHAL BE CONNECTED UNDER DE-ENERGISED CONDITION.
   PORT 2 & 3 SHAL BE CONNECTED UNDER ENERGISED CONDITION.
3. FOR ON/OFF DUTY PNEUMATIC CONTROL VALVE,SMART POSITIONER SHALL NOT BE APPLICABLE.
4. JB TERMINALS SHALL BE CAGE CLAMP TYPE SUITABLE FOR 2.5 SQ. MM COPPER WIRE.
5. 15 METERS 1/4 " PVC COATED COPPER TUBING AND 1 SET OF FITTINGS TO BE SUPPLIED FOR EACH CONTROL VALVE FOR CONNECTION TO ISO VALVE AT INST AIR HEADER ON ONE END AND TO AIR LOCK RELAY/AIR FILTER REGULATOR ON THE OTHER END.
6. VOLUME BOOSTER IF REQUIRED SHALL BE PROVIDED.

** APPLICABLE TO VALVES WHERE OPEN/CLOSE ACTION REQUIRED ON INTERLOCK CONDITION

# SECTION – VI

## PART – B

# SUB – SECTION – IIIC - 10

## CONTROL VALVES, ACTUATORS & ACCESSORIES

## CONTROL VALVES, ACTUATORS & ACCESSORIES

**1.00.00 CONTROL VALVES, ACTUATORS & ACCESSORIES**

1.01.00 **General Requirements**

1.01.01 The control valves and accessories equipment furnished by the Bidder shall be designed, constructed and tested in accordance with the latest applicable requirements of code for pressure piping ANSI B 31.1, the ASME Boiler & pressure vessel code, Indian Boiler Regulation (IBR), ISA, and other standards specified elsewhere as well as in accordance with all applicable requirements of the "Federal Occupational Safety and Health Standards, USA" or acceptable equal standards. All the Control Valves, their actuators and accessories to be furnished under this Sub-section will be fully suitable and compatible with the modulating loops covered under the Specification.

1.01.02 All the control valves and accessories offered by the Bidder shall be from reputed, experienced manufacturers of specified type and range of valves.

1.01.03 For control valve such as pressure and temperature control valve for Aux PRDS applications, Separator Drain Control Valves etc., also refer to the corresponding mechanical section in addition to requirements stipulated in this subsection.

1.02.00 **CONTROL VALVE SIZING & CONSTRUCTION**

1.02.01 The design of all valve bodies shall meet the specification requirements and shall conform to the requirements of ANSI (USA) for dimensions, material thickness and material specification for their respective pressure classes.

1.02.02 The valve sizing shall be suitable for obtaining maximum flow conditions with valve opening at approximately 80% of total valve stem travel and minimum flow conditions with valve stem travel not less than 10% of total valve stem travel. All the valves shall be capable of handling at least 120% of the required maximum flow. Further, the valve stem travel range from minimum flow condition to maximum flow condition shall not be less than 50% of the total valve stem travel. The sizing shall be in accordance with the latest edition of ISA handbook on control valves. While deciding the size of valves, Bidder shall ensure that valves trim exit outlet velocity as defined in ISA handbook does not exceed 8 m/sec for liquid services, 150 m/sec. for steam services and 50% of sonic velocity for flashing services. Bidder shall furnish the sizing calculations clearly indicating the outlet velocity achieved with the valve size selected by him as well as noise calculations, which will be subject to Employer's approval during detailed engineering.

1.02.03 Control valves for steam and water applications shall be designed to prevent cavitation, wire drawing, flashing on the downstream side of valve and down stream piping. Thus for cavitation/flashing service, only valve with anti cavitation trim shall be provided. Detailed calculations to establish whether cavitation will occur or not for any given application shall be furnished.

1.02.04 Control valves for application such as SH Spray Control, RH spray Control, Heavy Oil Heating, pressurizing and Control system shall have permissible leakage rate as per leakage Class V. All other control valves shall have leakage rate as per leakage Class-IV.

1.02.05 The control valve induced noise shall be limited to 85 dBA at 1 meter from the valve surface under actual operating conditions. The noise abatement shall be achieved by valve body and trim design and not by use of silencers.

**2.00.00 VALVE CONSTRUCTION**

2.01.00 All valves shall be of globe body design & straightaway pattern with single or double port, unless other wise specified or recommended by the manufacturer to be of angle body type. Rotary valve may alternatively be offered when pressure and pressure drops permit.

2.02.00 Valves with high lift cage guided plugs & quick-change trims shall be supplied.

2.03.00 Cast Iron valves are not acceptable.

2.04.00 Bonnet joints for all control valves shall be of the flanged and bolted type or other construction acceptable to the Employer. Bonnet joints of the internal threaded or union type will not be acceptable.

2.05.00 Plug shall be of one-piece construction cast, forged or machined from solid bar stock. Plug shall be screwed and pinned to valve stems or shall be integral with the valve stems.

2.06.00 All valves connected to vacuum on down stream side shall be provided with packing suitable for vacuum applications (e.g. double vee type chevron packing)

2.07.00 Valve characteristic shall match with the process characteristics.

2.08.00 Extension bonnets shall be provided when the maximum temperature of flowing fluid is greater than 280 deg. C.

2.09.00 Flanged valves shall be rated at no less then ANSI press class of 300 lbs.

**3.00.00 VALVE MATERIALS**

| Sr. No. | Service | Body material | Trim Material |
|---|---|---|---|
| 1 | Non-corrosive, non-flashing and non-cavitation service except DM water | Carbon steel ASTM-A216 Gr. WCB for fluid temperature below 275 Deg. C<br>Alloy steel ASTM-A217Gr. WC9 for fluid temperature above 275 Deg. C | 316SS stellited with stellited faced guide posts and bushings. |
| 2. | Severe flashing/cavitation services | Alloy steel ASTM-A217 Gr. WC9 | 440 C |
| 3. | Low flashing/cavitation service | Alloy steel ASTM-A217 Gr. WC6 | 17-4 PH SS |
| 4. | DM water service | 316 SS | 316 SS |

NOTE Valve body rating shall meet the process pressure and temperature requirement as per ANSI B16.34.

However, Bidder may offer valves with body and trim materials better than specified materials and in such cases Bidder shall furnish the comparison of properties including cavitation resistance, hardness, tensile strength, strain energy, corrosion resistance and erosion resistance etc. of the offered material vis-a-vis the specified material for Employer's consideration and approval.

**4.00.00 END PREPARATION**

Valve body ends shall be either butt welded/socket welded, flanged (Rubber lined for condensate service) or screwed as finalized during detailed engineering and as per Employer's approval. The welded ends wherever required shall be butt welded type as per ANSI B 16.25 for control valves of sizes 65 mm and above. For valves size 50 mm and below welded ends shall be socket welded as per ANSI B 16.11. Flanged ends wherever required shall be of ANSI pressure-temperature class equal to or greater than that of the control valve body.

**5.00.00 VALVE ACTUATORS**

All control valves shall be furnished with pneumatic actuators except for pressure and temperature control valve for auxiliary PRDS application (electro-hydraulic / pneumatically operated) and separator drain control valve (electro-hydraulic type).The Bidder shall be responsible for proper selection and sizing of valve actuators in accordance with the pressure drop and maximum shut off pressure and leakage class requirements. The valve actuators shall be capable of operating at 60 deg.C continuously.

Valve actuators and stems shall be adequate to handle the unbalanced forces occurring under the specified flow conditions or the maximum differential pressure specified. An adequate allowance for stem force, at least 0.15 Kg/sq.cm. per linear millimeter of seating surface, shall be provided in the selection of the actuator to ensure tight seating unless otherwise specified.

The travel time of the pneumatic actuators shall not exceed 10 seconds.

**6.00.00 CONTROL VALVE ACCESSORY DEVICES**

6.01.00 All pneumatic actuated control valve accessories such as air locks, hand wheels/hand-jacks, limit switches, microprocessor based electronic Positioner, diffusers, external volume chambers, position transmitters (capacitance or resistance type only), reversible pilot for Positioner, tubing and air sets, solenoid valves and junction boxes etc. shall be provided as per the requirements.

**7.00.00 SPECIFICATIONS FOR MICROPROCESSOR BASED ELECTRONIC POSITIONER**

| | | | |
|---|---|---|---|
| 1 | Electrical | a) Input Demand Signal | 4-20 mA |
| | | b) Power Supply | Loop Powered from the output card of Control System. |
| | | c) HART Protocol | Compatibility for Remote Calibration & Diagnostics (Super-imposed HART signal on input Signal (4-20 mA) |
| | | d. Valve position sensing | Position sensing, 4-20 mA output signal to be provided for control system. |
| 2 | Environment | a) Operating temp. | (-)30 To 80 Deg. C |
| | | b) Humidity | 0-95 % |

| | | | |
|---|---|---|---|
| | | c) Protection class | IP-65 Minimum |
| 3 | Software for Configuration and Diagnostics | Software | Windows based software. Software shall meet the requirements for Configuration, Diagnostics, Calibration and Testing of the actuator. |
| | | Diagnostic/Test features | Advanced diagnostic features like Stroke counter or Travel counter, Leakage in actuators, Valve Signature analysis, Step Response test, Valve friction /Jamming detection etc to be provided. |
| 4 | Test reports/ Certificates | Factory Valve Signature Tests Reports (Pr Vs Valve travel and Travel Vs I/P signal) are to be provided. | |
| | | Test certificates as per Manufacture Standard/Relevant Standard are to be submitted. | |
| 5 | Configuration/ Calibration. | Remote & Local Calibration, Auto & Manual Calibration shall be possible. | |
| 6 | Operating Range | Full range/ Split range. | |
| 7 | Modes | Valve Action | Direct / Reverse Valve Action |
| | | Flow Characterization | Possible to fit Valve Characteristic Curves- Linear , Equal percentage etc. |
| 8 | Fail Safe/Fail Freeze | Fail Safe/Fail Freeze feature is to be provided. (In case the fail freeze feature is not intrinsic to the positioner, Bidder shall achieve the same externally through solenoid valve connected in the pneumatic circuit). | |
| 9 | Pneumatic | Air capacity | Sufficient to handle the valves & actuators selected/ Boosters to be supplied, if required. |
| | | Air pressure | To suit the air supply pressure/quality available. |
| | | Process connection | ¼" NPT |
| 10 | Performance | Characteristic deviation | <=0.5 % of span. |

| | | | |
|---|---|---|---|
| | | c) Protection class | IP-65 Minimum |
| 3 | Software for Configuration and Diagnostics | Software | Windows based software. Software shall meet the requirements for Configuration, Diagnostics, Calibration and Testing of the actuator. |
| | | Diagnostic/Test features | Advanced diagnostic features like Stroke counter or Travel counter, Leakage in actuators, Valve Signature analysis, Step Response test, Valve friction /Jamming detection etc to be provided. |
| 4 | Test reports/ Certificates | Factory Valve Signature Tests Reports (Pr Vs Valve travel and Travel Vs I/P signal) are to be provided. | |
| | | Test certificates as per Manufacture Standard/Relevant Standard are to be submitted. | |
| 5 | Configuration/ Calibration. | Remote & Local Calibration, Auto & Manual Calibration shall be possible. | |
| 6 | Operating Range | Full range/ Split range. | |
| 7 | Modes | Valve Action | Direct / Reverse Valve Action |
| | | Flow Characterization | Possible to fit Valve Characteristic Curves- Linear , Equal percentage etc. |
| 8 | Fail Safe/Fail Freeze | Fail Safe/Fail Freeze feature is to be provided. (In case the fail freeze feature is not intrinsic to the positioner, Bidder shall achieve the same externally through solenoid valve connected in the pneumatic circuit). | |
| 9 | Pneumatic | Air capacity | Sufficient to handle the valves & actuators selected/ Boosters to be supplied, if required. |
| | | Air pressure | To suit the air supply pressure/quality available. |
| | | Process connection | ¼" NPT |
| 10 | Performance | Characteristic deviation | <=0.5 % of span. |

| | | | |
|---|---|---|---|
| | | Ambient temp effect | <=0.01 %/ deg C or better. |
| 10 | EMC & CE Compliance | Required to International Standard like EN/IEC. | EN50081-2 & EN50082 or equivalent. |
| 11 | Accessories | In-built Operator Panel | Display with push buttons for configuration and display on the positioner itself (Password protected/Hardware lock). |
| | | Hand Held Hart Calibrator | Universal Hart Calibrator to be provided (for quantity, refer *Part-A: Contract quantities* of the specification). |
| | | Press Gauge Block | For supply & output pressures, Air Filter Regulator and other accessories shall be provided on as required basis for making system complete. |
| | | Electrical Cable Entry | 1/2'"NPT, side or bottom entry to avoid water ingress. |
| | | Valves Mounting Assembly | For Sliding Stem/Rotary/Single acting/Double acting actuators on as required basis |

*** Note**:

Employer is providing a centralized HART management system including the HART multiplexing/ interfacing system. The HART signals shall be picked up from marshalling terminals of DDCMIS (SG/TG DDCMIS as well as BOP DDCMIS), as applicable. The details of the above mentioned employer's HART management system are as below:

The following functionalities are achieved through industry standard softwares of the HART management system for electronic transmitters, temperature transmitters and analysers:

a) Constant scanning to monitor faults or changes to instrument configuration.

b) Employer-defined and standard calibration and configuration procedures for all transmitters.

c) Constant signal data collection facilities to maintain continuously updated records.

d) Automatic tracking of configuration changes made in the field, such as may be introduced by hand-held communicator. All configuration function associated with hand-held communicators shall be available in the system.

e) Event and log reports on screen as well as on printer.

f) Any addition/deletion of transmitter will be reported on printer and logged in hard disk.

Further, the positioners shall be monitored from the above described HART management system .To achieve this, Bidder shall provide the necessary software to achieve the functionalities described above under "Remote Configuration and Diagnostics", and this software shall be loaded in the Employer's HART management system.

**8.00.00 TEST AND EXAMINATION**

All valves shall be tested in accordance with the quality assurance programme agreed between the Employer and Contractor, which shall meet the requirements of IBR and other applicable codes mentioned elsewhere in the specifications. The tests shall include but not be limited to the following:

8.01.00 Non Destructive Test as per ANSI B-16.34.

8.02.00 Hydrostatic shell test in accordance with ANSI B 16.34 prior to seat leakage test.

8.03.00 Valve closure test and seat leakage test in accordance with ANSI-B 16.34 and as per the leakage class indicated above.

8.04.00 Functional Test: The fully assembled valves including actuators control devices and accessories shall be functionally tested to demonstrate times from open to close position.

8.05.00 CV Test: Please refer Cl No. 1.00.00, Sub-section-IV:I9 (Type test requirements), Control Valves.

Bidder shall furnish all the control valves under this main plant package as finalized during detailed engineering stage without any price repercussions whatsoever depending on the process requirements. All the control valves provided by the Bidder for this project shall meet the specifications requirements specified herein. Specification for control valves in this Sub-section has to be read in conjunction with other relevant Sub-sections of this specification.

# SECTION-D

## EQUIPMENT SPECIFICATION
## DATA SHEETS - A&B
## DATA SHEETS - C
## QUALITY PLAN
## BILL OF QUANTITY
## SPARES
## SUBMISSION OF DRAWING

# SECTION – D

# EQUIPMENT SPECIFICATION

## 1.0 SCOPE

This specification covers the Design, Manufacture, Inspection and Testing at the manufacturer's works, proper packing for transportation and delivery to site of Control valve (with Pneumatic/Electric Actuator) for use in Utility/Captive Power Station/Combined Cycle Station.

## 2.0 CODES AND STANDARDS

2.1 All the equipments specified herein shall comply with the requirements of the latest issue of the relevant National and International standards.

2.2 The Design and Materials used for the components shall also comply with the relevant National and International standards.

2.3 As a minimum requirement, the following standards shall be complied with :

Indian Boiler Regulation (IBR)

| | | |
|---|---|---|
| Allowable Seat leakage | : | ANSI-B16.104 / FCI-70.2 |
| Pressure & Temperature ratings | : | ANSI-B16.34 |
| Enclosure class | : | IEC-144 / NEMA / IS-13947 |
| Control Valves | : | ISA S-75 |
| Electric Motor operated Actuators | : | IS-9334 |

## 3.0 TECHNICAL REQUIREMENTS

The Control valve, Actuator and the accessories shall be suitable for continuous operation under an ambient temperature of 0-55°C and Relative Humidity of 0-95% unless specified otherwise in volume IIB Section-B or Section-C.

3.1 Control Valve

The control valve shall be suitably designed for the operating conditions and system characteristics as specified in the Data Sheet-A.

3.1.1 The control valve shall be of globe body design with single port. The valve trim, shall be suitable for quick removal without any cutting or welding.

3.1.2 The material of body, internals and packing shall be as specified in the data sheets. Alternatives, considered more suitable for service specified may be given as alternative offer, along with adequate justification. However main offer shall totally meet specification requirements. Asbestos shall not be used for the packing or any other component.

3.1.3 The valve bonnet and packing shall be suitable for the service conditions as in Data Sheet-A. Gland sealed type bonnets are not acceptable. Double packing is mandatory for applications involving vacuum service. Bonnets having teflon packing shall have valve stem finished to 2-4 microns. Packing material requiring lubrication will not be acceptable. Justification for proper selection of bonnet & packing shall be furnished in the bid.

3.1.4 The valve end connection as specified in Data Sheet-A shall conform to ANSI B16.25 for Butt Weld connection and ANSI B16.5 for flanged ends. End to end dimension shall be as per ANSI 16.10.

3.1.5 The valve seat leakage shall be as per ANSI B16.104 / FCI-70.2. The leakage class shall be as per Data Sheet-A.

3.1.6 The valve body shall have the direction of flow embossed on all valves.

3.1.7 The sizing shall conform to the requirements of ANSI/ISA(S75- 01), and the valve capacity shall be selected so as to meet the following:

| | | | | |
|---|---|---|---|---|
| Valve with Linear characteristic. | - | Normal Flow (Design Point) | : | 70-75% valve lift. |
| | - | Max. Flow | : | 90% valve lift. |
| | - | Min. Flow | : | >10% valve lift. |
| Valve with Equipercentage Characteristic | - | Normal Flow (Design Point) | : | 75-85% valve lift. |
| | - | Max. Flow | : | 90% valve lift. |
| | - | Min. Flow | : | >10% valve lift. |
| ON/OFF Quick open Characteristic | - | 1.1 times the CV calculated on the basis of maximum flow condition. | | |

3.1.8 Calculation for valve sizing, velocity and noise shall be subject to purchaser's approval during contract stage. However responsibility of proper selection and design for the duties specified lies with the vendor. Any modifications required to be done on the valves or actuators & accessories to achieve satisfactory performance of the control system shall be done without any commercial implication.

3.1.9 Suitable justification and evidence shall be furnished regarding proper selection of the valve.

3.1.10 The valve outlet velocities shall be limited to the following values, unless otherwise specified in the Data sheet-A.

| | | | |
|---|---|---|---|
| i) | Liquid service | <= | 7 Metres/Sec. |
| ii) | Steam service | <= | 1/3 Sonic velocity in the flow medium. |

3.1.11 For flashing duty, the trim design shall be such that the vapour bubbles are kept away from valve body.

3.1.12 For cavitation service, the trim design shall be of multistage pressure drop type, so as to avoid cavitation altogether, instead of keeping cavitation away from valve parts.

3.1.13 In case of predicted noise level above 85 dBA, suitable low noise trim or inbuilt diffusers shall be provided to bring down the noise level below 85dBA.

3.1.14 The equivalent weighted sound level measured at 1.5M. above floor level in elevation and one metre horizontally from the control valve expressed in decibels to a reference of 0.0002 microbar shall not exceed 85 dBA (without pipe insulation). The offer shall include noise prediction calculations for each valve.

3.1.15 In case of wrong selection/mal operation of valve and for associated actuator during guarantee period, the vendor shall replace the valve suitably with a modified/new valve of design as approved by purchaser and all the expenses for replacement, rectification/modification including transportation both ways will be at vendor's expenses.

3.2 Pneumatic Actuator

The pneumatic actuators shall be employed for modulating or open/close duty, as specified in Data Sheet-A. The bidder shall be responsible for proper selection and sizing of valve actuators in accordance with the pressure drops and shut off pressure.

3.2.1 The pneumatic spring opposed diaphragm actuator for modulating duty shall be capable of positioning the associated valve at desired opening for all the operating conditions specified.

3.2.2 The pneumatic actuator for open/close duty shall be suitable for fast opening/closing of the associated valve.

3.2.3 The actuator design shall allow valve assembly to be mounted at 45° inclination on either side in the vertical plane.

3.2.4 The actuators shall be suitably sized to ensure that the associated valve travel time from full open to full closed position and vice versa is less than 20 seconds under the most stringent service conditions.

3.2.5 The actuator shall be painted with epoxy based paint.

3.3 Accessories for Control valve with Pneumatic Actuator

The bidder shall offer all the accessories as specified in the Data Sheet - A for the Pneumatic Actuators under modulating or OPEN/CLOSE duty. The accessories specified shall be supplied duly mounted on the valve actuator and piped with PVC covered copper tube and flare less brass fittings (Refer typical hook up diagram in sheet 12 of 12).

3.3.1 Hand wheel

Hand wheel shall have OPEN & CLOSE direction marking and clockwise rotation as viewed from front shall close the valve. The hand wheel shall have a circular stainless steel plate with Tag number and service.

3.3.2 Local Position Indicator

Each actuator shall be provided with a mechanical pointer attached to stem, moving over a graduated scale with markings, for OPEN, 25%, 50%, 75%, CLOSE positions.

3.3.3 Position Transmitter

The position transmitter shall be supplied as indicated in Data Sheet-A. The electronic position transmitter shall be non-contact type with 4-20 mA DC 2-wire output suitable for 12-50V DC supply. The resistance type position transmitter shall have 0-100 ohm variation for valve position change of 0-100%. The position transmitters of both types shall have accuracy and enclosure class. Necessary cable glands shall be supplied.

3.3.4 Air Filter Regulator

Instrument quality air at suitable pressure of 5.5 Kg/Cm2(g) to 7 Kg/Cm2(g) shall be supplied to each valve through air filter regulator. The filter regulator shall include an inbuilt blow-down valve, 5 micron size filter. The design pressure for regulator shall be 7 Kg/cm2g. The Air filter regulator shall be selected to meet the requirements of positioner/actuator, E/P convertor and air-lock. The flow capacity of the Air filter regulator shall be variable with a knob. Output gauge shall be provided wherever pneumatic positioner is not specified for the valve.

3.3.5 Air Lock Relay

Air lock relay shall retain the valve position stayput, in case of air supply failure and shall reset automatically on resumption of air supply. Air lock shall have a threaded plug for evacuating diaphragm air if required for local manual operation.

3.3.6 Solenoid Valves

Solenoid valves are meant for interlock & protection purposes overriding the controller signal, and/or to result stayput action on controller signal failure. The Solenoid valve shall be 3-way Universal type and the valve internals shall be of stainless steel. The coil shall have class-H insulation and rated for continuous AC/DC duty as specified in Data sheet-A. The enclosure shall be to IP-55. Cable gland shall be provided for cable entry. The solenoid shall in general conform to IS-8935. The solenoid operation shall be universal type. The solenoid shall be suitable for 24V DC supply, unless specified otherwise in Data Sheet-A.

3.3.7 Limit Switches

Limit switches are required as specified in the data sheet-A. Each limit switch shall have 2NO+2NC contacts with contact rating of 5A at 240V AC/0.2A at 220V DC unless otherwise specified. The switch enclosure shall conform to IP-55. Each limit switch shall be supplied with cable glands.

3.3.8 I/P Converter

I/P Converters shall preferably be of force balance type and shall produce pneumatic output signal corresponding to input current signal, also specified in Data Sheet. Convertor electronics shall be protected against reverse connection of signal polarities and a separate external connection shall be provided to facilitate grounding of instrument casing. Cable glands with neoprene gromets suitable for PVC cables shall be provided. I/P convertor shall have span adjustment facility. I/P convertor enclosure shall conform to IP-55 enclosure class.

3.3.9 Positioner

Positioner shall be suitable for accepting controller output signal 0.2-1.0 Kg/cm2, 0.2-0.6 Kg/cm2 or 0.6-1.0 Kg/cm2 as specified and give an output suitable for the actuator. Pneumatic positioner shall have 3 gauges. All gauges shall have metric scales. The positioner input signal range shall be adjustable. Wherever applicable, it shall be possible to bypass the positioner by means of a switch. Linearity and Hysterisis shall be as indicated in Data sheet-A

3.3.10 Electro pneumatic Positioner

In place of separate E/P Converter and pneumatic positioner a combined electro pneumatic positioner can also be supplied. The electro pneumatic positioner shall have 2 gauges.

3.3.11 Junction Box

Wherever specified, an integral junction box with all electrical accessories conduited up to JB shall be supplied. The junction box shall have two (2) cable glands for outgoing cables. Junction box shall have enclosure class of IP-55.

3.4 Guarantee & Performance

3.4.1 The overall performance of the control valve with pneumatic actuator assembly shall be as follows:-

| | | | |
|---|---|---|---|
| i) | Hysteresis | : | ± 1% of span |
| ii) | Linearity | : | ± 2% of span |
| iii) | Sensitivity | : | ± 0.5% of span. |
| iv) | Repeatability | : | ± 1% of span |
| v) | Accuracy (Overall) | : | ± 2% of span |

3.4.2 The guarantee for the control valve, pneumatic actuator & accessories shall be for 12 months continuous operation from the date of commissioning, unless specified otherwise in VOL-IIB Section-B or Section-C.

3.5 Electric Actuator

The electric actuator shall be employed for modulating duty.

3.5.1 The actuator assembly shall be complete with drive motors, gears, hand wheel, signaling & switching units, associated control, integral starter, (when specified) and other accessories as required.

3.5.2 The Electric Actuator shall be capable of positioning the associated valve at the desired opening for all the operating conditions.

3.5.3 The motor shall meet the requirements of Current, torque, Axial thrust, Accelerating & stall time as imposed by the driven equipment.

3.5.4 The motor shall be suitable for direct on line starting.

3.5.5 Motors shall be suitable for inching & plugging duty operations.

3.5.6 The motors shall be capable of starting and accelerating to rated speed at 85% of rated voltage.

3.5.7 The motors shall be rated for continuous operations for modulating duty.

3.5.8 The motor shall operate satisfactorily under the following conditions:

i) ±10% supply voltage variation at rated frequency.

ii) -5% to + 3% variation in frequency at rated supply voltage.

iii) Simultaneous variation in voltage and frequency, the sum of absolute percentage not exceeding 10%.

3.5.9 The Actuator shall be suitable for mounting directly on the valve and shall be suitable for mounting in any position. Supports required for inclined mounting shall form part of supply of valve assembly.

3.5.10 The actuator shall be capable of producing the required torque and thrust at the output shaft for satisfactory operation of the associated valve.

3.5.11 Each actuator shall have a hand wheel for emergency operation. The hand wheel shall be designed such that it is declutched automatically when the power supply to the motor is restarted.

3.5.12 The hand wheel shall be so arranged that when looking from hand wheel, the valve is closed by rotating the hand wheel in clockwise direction.

3.5.13 Motor shall be totally enclosed conforming to IP-65 or better as per data sheet. The enclosure shall be suitable to protect the motor from leakage steam, water or oil from valve joints and glands.

3.5.14 Where flameproof enclosures are specified, it shall meet the specification IS-2148.

3.5.15 Insulation shall be at least class-B or better and shall be tropicalised to withstand the atmospheric condition.

3.5.16 The actuator shall be provided with antifriction bearing in grease filled cartridge.

3.5.17 Each actuator shall be provided with a mechanical position indicator to indicate accurately the valve position.

3.5.18 The integral starter, if specified in data sheet-A, shall be provided in weatherproof enclosure with protection class not less than IP-65 or better as per data sheet.

The integral starter shall consist of:

i) Mechanical & Electrically interlocked reversing contractors suitable for class AC4 duty or Thyristor as pet data sheet.

ii) Thermal overload relay.

iii) Step down control transformer with fuses.

iv) Interposing relay.

v) Monitoring relay..

vi) Open, Close & Stop push buttons.

vii) Indicating lamps.

viii) Local-Remote lockable selector switch with spare potential free contacts, wired for remote interface.

ix) A potential free contact shall be provided for remote annunciation of power failure/overload condition. The contact shall be SPDT, rated for at 5A 240V AC or 0.2A at 220V DC.

3.5.19 The actuator shall be suitably time rated for the duty cycle involved with the necessary number of starts per hour, but in no case, less than 1200 starts per hour.

3.5.20 The actuator shall be provided with a suitable control unit for receiving 4-20 mA signal from remote controller.

3.5.21 The servomotor gear should have self locking or suitable brake so as to maintain it's last position as and when the motor power is switched off.

3.5.22 Thermostat/Thermistor as specified in the data sheet shall be provided for sensing the winding temperature and giving trip command. The trip contact shall be change over type. The contact shall be wired up to the actuator terminal box.

3.6 Accessories for Control Valve with Electric Actuator

3.6.1 Torque Switches

i) Each actuator shall be provided with at least one open and one close torque switches each with 2 NO+2 NC contacts. The contacts shall be rated for 5A at 240V AC or 0.2A at 220V DC.

ii) The torque switches shall have a minimum accuracy ± 3% of set value.

iii) The torque switches shall be provided with calibrated knobs for setting desired torque. Separate knobs shall be provided for close and open torque switches.

iv) The torque switches shall be provided with mechanical latching device to prevent operation when unsealing from the positions. The latching device shall unlatch as soon as the valve leaves the end position. If such provision is not possible, the torque switches shall be bypassed by end position limit switches, which open on valve leaving end position. These limit switches are additional to the number of limit switches specified elsewhere.

v) The torque switches or worm gear shall be self-locking type so that when torque switch operates it remains operated until the actuator is operated in the reverse.

vi) The torque switch enclosure shall conform to IP-55.

3.6.2 Limit Switches

Each limit switch shall have 2NO+2NC contact with contacts rated for 5A 240V AC/0.2A 220V DC unless otherwise specified. The switch enclosure shall conform to IP-55. Each limit switch shall be supplied with cable glands.

3.6.3 Space Heater

A space heater shall be provided in limit switch and starter compartments to prevent condensation. This shall be suitable for the power supply specified in the data sheet. Where integral starters are provided the space heaters shall be wired to control supply within the actuator.

3.6.4 Remote Position Transmitter

The position transmitter shall be supplied as indicated in Data Sheet-A. The electronic position transmitter shall be non-contact type with 4-20mA DC 2-wire output suitable for 12-50V DC supply. The resistance type position transmitter shall have 0- 100 ohm variation for valve position change of 0-100%. The position transmitters of both types shall have ± 1% accuracy. The enclosure shall conform to IP-55. Necessary cable glands shall be supplied.

3.6.5 Wiring

i) The actuator and the accessories will be neatly wired up to the terminal boxes.
ii) The internal wiring shall be minimum of 1 $mm^2$ stranded PVC insulated copper conductor.
iii) The wiring shall be identified by means of numbered ferrules on both ends of all wires.

3.7 Terminal and Terminal boxes

3.7.1 Motor Terminal Box

i) The terminals, terminal boards, terminal boxes, winding tails and associated equipment shall be suitable for connection to supply system having short circuit capacity specified in data sheet and clearance time determined by the associated fuses.

ii) The terminals shall be stud type insulated from the frame. The insulation shall not be porcelain. The studs shall be of brass or stainless steel or phosphor bronze of adequate size.

iii) The terminal box shall be totally enclosed conforming to degree of protection IP-65.

3.7.2 Actuator Terminal Box

i) All terminals of limit and torque switches, space heater, position transmitters, thermostat/thermister shall be brought to a common terminal box. The enclosure shall be to degree of protection IP-65.

ii) Terminal board with plug in connector shall be provided. Alternatively stud type or insertion type may be considered. Pinch screw type however will not be accepted. All terminals shall be shrouded to prevent accidental contact. Where stud type terminals are offered, it shall be as per clause 3.7.1 (ii).

iii) There shall be at least five terminals spare to terminate spare cores of cable.

3.7.3 Cable Glands

The motor terminal box and actuator terminal box shall be provided with required number of double compression nickel plated brass cable glands to suit cable type and associated size.

3.7.4 Earthing Terminal

Two earthing terminal shall be provided on either side of motor and actuator terminal box.

3.7.5 Painting

The Actuator shall be painted with epoxy-based paint.

## 4.0 TESTING AND INSPECTION

4.1 The bidder shall adopt suitable quality assurance plan to ensure that the equipments offered will meet the specification requirements in full.

4.2 The bidder shall furnish the Quality Plan in the format enclosed in volume-III. In case the Quality Plan(s) is/are included in volume-IIB, the bidder shall furnish his Quality Plan strictly in line with the same. The Quality Plan shall be discussed and finalised with the technically accepted bidders before opening the price bid. The stages where purchaser would like to be associated for witnessing or verification of tests would be indicated by the purchaser in the Quality Plan before approval.

4.3 The following test shall be conducted as a minimum requirement.

4.3.1 Control Valve

i) Radiographic tests on castings.
ii) Dye penetrant tests on machined surface.
iii) Ultrasonic tests for the forgings & bars of all valves with 60 Kg/cm$^2$ & higher ratings.
iv) Hydrostatic tests as per ANSI B 16.34 prior to seat leakage tests.
v) Valve closure and seat leakage tests as per ANSI B 16.104 / FCI-70.2.

4.3.2 Pneumatic Actuators

Functional test of actuator and each accessory.

4.3.3 Electric Actuator

i) Routine tests on motors as per IS: 325.
ii) Functional test on actuator and each accessory.
iii) Insulation resistance and high voltage test.
iv) Stall current & Stall torque test.
v) Output shaft speed and torque of actuator and corresponding current tests.

4.3.4 Control valve with Actuator & Accessories fully assembled

i) Functional tests of control valve operation along with actuator & accessories.
ii) Dimension checks.

4.3.5 Type tests or Test Reports

i) Valve lift vs. Flow test (Cv Test)
ii) Degree of protection tests for the enclosures
ii) Temperature rise test (applicable for Electrical Actuator only).
iii) Type test for motor as per IS: 325.

4.4 Inspection will be conducted by BHEL and/or their authorised representatives as per the agreed inspection schedule. The inspection schedule will be submitted by the bidder, for BHEL's approval at contract stage. The cost of all tests and inspections will be deemed to have been included in the bid. For all the type tests covered under 4.3.5 above, "Type Test Certificates" as per agreed Quality Plan shall be furnished. In the absence of the same, such Type Tests shall be arranged at the Vendor's works in the presence of BHEL and/or their authorised representatives or in independent Test House/Laboratory approved by BHEL.

4.5 The Standard QP is included in this specification to enable bidder to understand the extent of inspection and testing requirements to execute this job. The successful bidder has to follow the agreed QP, taking care of customer requirements mentioned in Sec-C and submit QP for final approval by BHEL / Customer.

## 5.0 SPARES AND CONSUMABLES

5.1 Commissioning Spares and consumables

As part of the main equipment supply, the bidder shall supply all commissioning spares and consumables required during Start-up,

5.2 Mandatory Spares

The bidder shall offer along with main offer, the Mandatory Spares as specified in Volume IIB Section-C of the specification. The Mandatory Spares offered shall be of the same make and type as the main equipment.

5.3 Recommended Spares

The bidder shall furnish a list of Recommended Spares along with the normal service expectancy period and frequency of replacement; quantities recommended for 3 years operation along with unit rate against each item to enable BHEL / BHEL's Customer to place a separate order later, if required.

5.4 Special Tools & Tackles

The bidder shall furnish a list of Special Tools & Tackles included in the bid.

## 6.0 DRAWINGS AND DOCUMENTS

6.1 The bidder shall furnish the following documents in required number of copies along with the bid:

6.1.1 Data sheet-B, completely filled-up along with all enclosures.

6.1.2 Wiring diagrams for Electrical Actuators.

6.1.3 Hook up diagrams of Control Valve with Actuator & accessories.

6.1.4 Valve & actuator assembly dimensional drawings with weights.

6.1.5 Quality Plan

6.1.6 All relevant Catalogs with detailed technical information.

6.1.7 Bar-chart to indicate the time schedule for procurement, manufacture, testing and despatch.

6.2 The successful bidder shall furnish the following documents in required number of copies to BHEL during the contract stage:

6.2.1 For approval

i) Dimensional drawings.

ii) Installation drawings with overall dimensions of the completed equipment and clearances for operation and maintenance.

iii) Data sheet-C, completely filled-up along with all the enclosures including the sizing calculations & noise calculations.

iv) Quality Plan.

v) Test Certificates.

6.2.2 Final / As-built Drawings

Final / As-built drawings / CDs in required number of copies shall be submitted.

6.3 Operation & Maintenance Manuals

O&M Manuals in required number of copies shall be submitted. O&M manuals shall also contain storage and commissioning instructions.

## 7.0 MARKING AND PACKING

7.1 Marking

A stainless steel metal nameplate should be permanently fixed on each equipment giving its tag number and technical specifications.

7.2 Packing

All equipment / materials shall be suitably packed and protected for the entire period of dispatch, storage and erection against impact, abrasion, corrosion, incidental damage due to vermin, sunlight, high temperature, rain, moisture, humidity, dust, sea water spray (where applicable) as well as rough handling and delays in transit and storage in open.

55

## 8.0 APPLICABLE DATA SHEET FORMS

This document shall be read with one or more of the following data sheet forms :

- Data sheet A&B for Control Valve with Pneumatic Actuator : Data sheet no. PES-145-06-DS1-1
- Data sheet C for Control Valve with Pneumatic Actuator : Data sheet no. PES-145-06-DS2-1
- Data sheet A&B for Control Valve with Electric Actuator : Data sheet no. PES-145-06-DS3-1
- Data sheet C for Control Valve with Electric Actuator : Data sheet no. PES-145-06-DS4-1

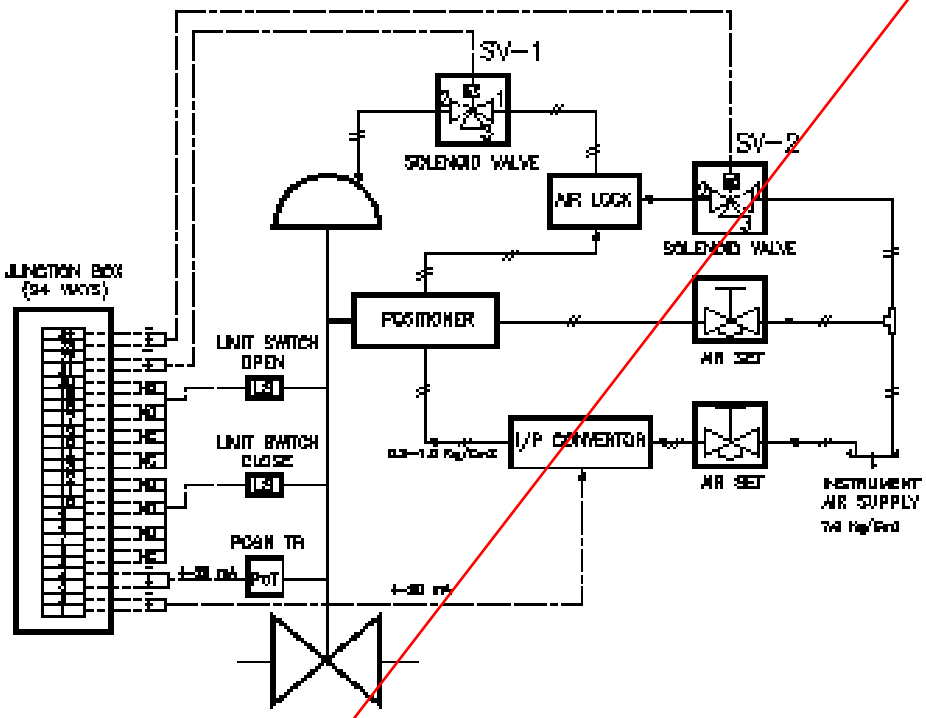


NOTES:–

1 SOLENOID VALVE SV-1 WILL BE PROVIDED, IF SPECIFIED IN DATA SHEETS FOR OVER-RIDING THE CONTROLLER SIGNAL.

2 SOLENOID VALVE SV-2 WILL BE PROVIDED, IF SPECIFIED IN DATA SHEET, FOR VALVE STAYPUT POSITION REQUIREMENT ON CONTROLLER SIGNAL FAILURE.

3 <u>SOLENOID VALVES PORT CONDITION</u>

PORT 1 AND 2 SHALL BE CONNECTED UNDER DE-ENERGISED CONDITION.

PORT 2 AND 3 SHALL BE CONNECTED UNDER ENERGISED CONDITION.

4 FOR ON/OFF DUTY PNEUMATIC CONTROL VALVE, THE FOLLOWING ACCESSORIES SHALL NOT BE APPLICABLE:–

1 POSITIONER
2 POSITION TRANSMITTER
3 I/P CONVERTOR
4 AIR LOCK

## 1.0 Electrical :

| | |
|---|---|
| Input Signal | 4-20mA |
| Power Supply | Loop Powered from the output card of Control System (12-30 V DC) |
| Hart Protocol | Compatibility for Remote Calibration & Diagnostic (Super-Imposed HART Signal on Input Signal to positioner (4-20mA) |
| Valve Position Feedback | 4-20mA output signal for Position Feedback is to be provided to control system. |

## 2.0 Environment :

| | |
|---|---|
| Operating Temperature | (-) 30 To 80 Deg.C |
| Humidity | 0-95% |
| Protection Class | IP-65 (Minimum) |

## 3.0 Diagnostic Features :

| | |
|---|---|
| **Diagnostic / Test Features** (to be available in Smart Positioner and shall be accessible through any HMS software) | **Minimum Diagnostic Features Like**<br>• Measurement of Valve positioning timing,<br>• Detection of actuator leakage,<br>• Display of fault alarm.<br>• Logging of alarms and history.<br>• Valve friction/jamming detection.<br>• Detection of valve wear & tear,<br>• Valve stroke length and timing. |
| | **Advanced Diagnostic Features Like (OPTIONAL)**<br>• On line partial closure test.<br>• Valve signature analysis (online graphical/tabular representation of input signal Vs valve travel).<br>• Step response test. |

## 4.0 Software :

| | |
|---|---|
| **Software**<br><br>(to be supplied alongwith smart positioner) | • Windows based software to meet the requirement for configuration, diagnostics, calibration and testing of Valve and actuator.<br>• Easily up-gradable with same hardware and compatible with any Hart Management Systems (HMS).<br>• Shall be capable to cater to all the tags in the specification at the same time without change in wiring. |

## 5.0 Hardware :

| | |
|---|---|
| **Hardware** (As required) | 1. PC with software for configuring and accessing diagnostic features of the positioners. |
| | 2. Multiplexers for interfacing smart positioner with PC. |
| | 3. Communication cable for interconnecting multiplexers with PC. |
| | 4. RS232/RS485 converter (if required) |

**Note :** Power supply for Multiplexer shall be arranged by the owner.

## 6.0 Valve Action :

| | |
|---|---|
| **Valve Action** | **Direct & Reverse.** (Same positioner for Single Acting or Double Acting And no separate relays required for changing from Single acting to double). |
| | During Failure of input Electrical signal (4-20 mA), valve to attain fail Freeze position without any external hardware. (Sol valve, Power Supply etc.) |

## 7.0 Flow Characterization :

| | |
|---|---|
| **Flow Characterization** | Possible to fit valve characteristic curve linear & Equal percentage |

## 8.0 Performance:

| | |
|---|---|
| Characteristic Deviation | <=0.75% of span |
| Ambient temp effect | <=0.01%/Deg C or better. |
| Dead Band | Adjustable 0.1 to 10%. |
| Scan Time | 10ms |
| Resolution | <=0.05% |
| Sensitivity/Linearity | 0.3-0.4% of FS |
| Repeatability | 0.32% of FS |

## 9.0 Test Certificates:

Test Certificates/Test Reports for degree of protection, Accuracy and calibration test (as a minimum) to be submitted as per Manufacture Standard / Relevant Standard.

## 10.0 EMC & CE compliance

International Standard Like EN/IEC. To EN 50081-2 & EN 50082 or equivalent

## 11.0 Accessories

| | |
|---|---|
| In Built Operator Panel | Display with push buttons for Configuration and display on the positioner itself |
| Hand Held Hart Calibrator | Universal Hart Calibrator To Be Provided, One Per Unit. |
| Press Gauge Block | For Supply & Output Pr., Filter Regulator Other Accessories Shall Be Provided As per Control valve hook-up diagram. |
| Electrical cable entry | ½ - NPT, side or bottom entry to avoid water Ingress. |

# SECTION – D

# DATA SHEETS – A & B

## Notes:

1. All general technical requirements including material & construction, leakage class, body sizing and Cv sizing etc. shall be as per customer spec.
2. Type of bonnet shall be according to the service condition. Extension bonnets shall be provided when the maximum temperature of the flowing fluid is greater than 280 $^{o}$C.
3. If the downstream is subjected to vacuum, flow direction of the fluid shall be to close. Separate indication for the same has not been made in the data sheet.
4. Valve and actuator shall be designed for full differential pressure (Max. shut-off pressure).
5. Mandatory spares for control valves, shall be as per contractual agreement with customer.
6. Testing & other requirements shall be as per customer's specifications.
7. Quantity indicated is for one unit.
8. Tolerances on end-to-end, center-to-center, center to face shall be in accordance with ASME B16.10.
9. For valves subjected to cavitation service, anti cavitation trim shall be provided.
10. Control valves in MSE-Power cycle system scope only have been included in this document.

## INDEX

| S.No. | SERVICE | Qty. / Unit | Qty. for Two Units |
|---|---|---|---|
| 1. | D/A Pegging from Aux. Steam Header (ASV-8) | 01 | 02 |
| 2. | D/A Pegging from CRH Line (CRHV-6) | 01 | 02 |
| 3. | Main Condensate Control (CDV-22 & CDV-25) | 02 | 04 |
| 4. | CEP A/B/C Minimum Recirculation (CDV-10, CDV-12 & CDV-14) | 03 | 06 |
| 5. | Excess Dump Control (CDV-43) | 01 | 02 |
| 6. | GSC min. flow recirculation (CDV-39) | 01 | 02 |
| 7. | Condensate for F/T-B (CDV-67) | 01 | 02 |
| 8. | Condensate for Valve Gland Sealing (CDV-72) | 01 | 02 |
| 9. | HPH-7A Drain to HPH-6A (DRV-53) | 01 | 02 |
| 10. | HPH-7B Drain to HPH-6B (DRV-59) | 01 | 02 |
| 11. | HPH-7A Drain to F/T-A (DRV-56) | 01 | 02 |
| 12. | HPH-7B Drain to F/T-B (DRV-62) | 01 | 02 |
| 13. | HPH-6A Drain to HPH-5A (DRV-2) | 01 | 02 |
| 14. | HPH-6B Drain to HPH-5B (DRV-8) | 01 | 02 |
| 15. | HPH-6A Drain to F/T-B (DRV-5) | 01 | 02 |
| 16. | HPH-6B Drain to F/T-B (DRV-11) | 01 | 02 |
| 17. | HPH-5A Drain to Deaerator (DRV-15) | 01 | 02 |
| 18. | HPH-5B Drain to Deaerator (DRV-22) | 01 | 02 |
| 19. | HPH-5A Drain to F/T-A (DRV-18) | 01 | 02 |
| 20. | HPH-5B Drain to F/T-A (DRV-25) | 01 | 02 |
| 21. | LPH-3 Drain to LPH-2 (DRV-28) | 01 | 02 |
| 22. | LPH-3 Drain to F/T-A (DRV-31) | 01 | 02 |
| 23. | LPH-2 Drain to LPH-1 (DRV-34) | 01 | 02 |
| 24. | LPH-2 Drain to F/T-B (DRV-37) | 01 | 02 |
| 25. | Deaerator Overflow (DRV-48) | 01 | 02 |
| 26. | DM Normal Makeup to Hotwell (DMV-19) | 01 | 02 |
| 27. | Emergency MU to Hotwell (DMV-23) | 01 | 02 |
| 28. | TG-ECW SYSTEM (ECW-20) | 01 | 02 |
| 29. | SG-ECW SYSTEM (ECW-83) | 01 | 02 |

| | DATA SHEET FOR CONTROL VALVES (WITH PNEUMATIC ACTUATOR) | SPECIFICATION NO.: PE-TS-381-145-I004 | |
|---|---|---|---|
| | | VOLUME II-B | |
| | | SECTION D | |
| | | REV. NO. 00 | DATE : 14/03/2013 |
| | | SHEET 4 OF 62 | |

Tag No. :…ASV-8… Qty.: …1 per Unit… Date Sheet No. PES-145-06-DS1-0
KKS Tag:...LBG51AA101

## DATA SHEET – A & B

| DATA SHEET – A FOR CONTROL VALVE (WITH PNEUMATIC ACTUATOR) (TO BE FILLED BY PURCHASER) | | | DATA SHEET – B (TO BE FILLED UP BY BIDDER) |
|---|---|---|---|
| GENERAL | PROJECT<br>SERVICE<br>LOCATION<br>DUTY<br>PIPE SIZE (inlet / outlet)<br>PIPE MATERIAL (inlet / outlet) | **SCCL–2x600 MW SINGARENI TPP**<br>D/A PEGGING FROM AUX. STEAM HEADER<br>[■] INDOOR [] OUTDOOR<br>[] ON/OFF [■] MODULATING<br>273 x 6.35 \| 508 x 12.7<br>SA 106 GR B \| SA 106 GRB | ……<br>……<br>……<br>……<br>……<br>……\|…… |
| BODY | MODEL NO.<br>TYPE OF BODY: GUIDING : NO. OF PORTS<br>BODY SIZE: PORT SIZE: DESIGN CV<br>END CONNECTION & RATING (ANSI)<br>BODY MATERIAL<br><br>PACKING: MATERIAL SINGLE / DOUBLE<br>BONNET TYPE<br>TRIM FORM<br><br>TRIM MATERIAL: SEAT \| PLUG<br>: CAGE \| GUIDE BUSH<br>FLOW<br>OUTLET VELOCITY<br><br>REQUIRED LEAKAGE CLASS<br>NOISE LEVEL (dBA) (spec. 3.1.14)<br>VACUUM SERVICE<br>ANTI CAVITATION TRIM | Bidder To Specify<br>[■] GLOBE [] ANGLE \| [] TOP [■] CAGE \| ONE<br><br>Bidder To Specify<br>[■] BWE [] SWE [] FLANGED<br>[■] A216 WCB [] A217 WC6 [] SS [] A217 CS<br>[] A351 CF8M<br>[] PTFE [■] GRAFOIL [] DOUBLE [■] SINGLE<br>[] STD [] EXTENDED [] FINNED<br>[■] LINEAR [] EQ. PERCENTAGE<br>[] QUICK OPEN (ON/OFF)<br>SS 316 STELLITED \| SS 316 STELLITED<br>SS 316 STELLITED \| SS 316 STELLITED<br>[] BELOW SEAT [] ABOVE SEAT<br>[] < 7 M/SEC(WATER) \| [■] MAC NO. < 1/3 (STM)<br>[] II [] III [■] IV [] V [] VI<br>LESS THAN 85 dBA<br>[] YES [■] NO<br>[] YES [■] NO | ……<br>……\|……\|……\|……<br>……\|……\|……<br>……<br>……<br>……<br>……<br>……<br>……\|……<br>……\|……<br>……<br>……<br>……\|……<br>……<br>……<br>……<br>…… |
| PNEUMATIC ACTUATOR | MODEL NO. & SIZE<br>CLOSE AT : OPEN AT (KG/CM$^2$g)<br>*TRAVEL TIME FOR<br>OPEN TO CLOSE, CLOSE TO OPEN<br>*VALVE POSN. ON SIGNAL AIR FAILURE<br>*VALVE POSN. ON SUPPLY AIR FAILURE | Bidder to Specify<br>1 \| 0.2<br>< 10 SEC<br>\|<br>[■] TO OPEN [] STAYPUT [] TO CLOSE<br>[■] STAYPUT | ……\|……<br>……\|……<br>……<br>……<br>……<br>…… |
| ACCESSORIES | POSITIONER (SMART ELECTRO PNEUMATIC)<br>AIR FILTER REGULATOR<br>AIR LOCK RELAY<br>POSITION LIMIT SWITCH<br>POSITION TRANSMITTER<br>SOLENOID VALVE<br>E/P CONVERTER<br>JUNCTION BOX<br>HAND WHEEL (SIDE MOUNTED)<br>LOCAL POSITION INDICATOR | [■] REQUIRED [] NOT REQUIRED<br><br>[■] REQUIRED [] NOT REQUIRED<br>[■] REQUIRED [] NOT REQUIRED<br>[■] REQUIRED [] NOT REQUIRED<br>PART OF POSITIONER<br>[■] REQUIRED [] NOT REQUIRED<br>PART OF POSITIONER<br>[■] REQUIRED [] NOT REQUIRED<br>[■] REQUIRED<br>[■] REQUIRED | ……<br>……<br>……<br>……<br>……<br>……<br>……<br>……<br>……<br>…… |

| | DATA SHEET FOR CONTROL VALVES (WITH PNEUMATIC ACTUATOR) | SPECIFICATION NO.: PE-TS-381-145-I004 | |
|---|---|---|---|
| | | VOLUME II-B | |
| | | SECTION D | |
| | | REV. NO. 00 | DATE : 14/03/2013 |
| | | SHEET 5 OF 62 | |

Tag No. :…ASV-8… Qty.: …1 per Unit… Date Sheet No. PES-145-06-DS1-0
KKS Tag:...LBG51AA101

## DATA SHEET – A & B

| DATA SHEET – A FOR CONTROL VALVE (WITH PNEUMATIC ACTUATOR) (TO BE FILLED BY PURCHASER) | | | DATA SHEET – B (TO BE FILLED UP BY BIDDER) |
|---|---|---|---|
| PERFORMANCE OF VALVE | LINEARITY<br>HYSTERISIS<br>SENSITIVITY<br>ACCURACY (OVERALL) | ± 2%<br>± 1%<br>± 0.5%<br>± 2% | ……<br>……<br>……<br>…… |

| SERVICE CONDITION | SL. No. + | LOAD | FLOW (T/HR) | INLET PR. KG/CM$^2$(A) | OUTLET PR. KG/CM$^2$(A) | TEMP DEG (C) | CALC ULATED CV | % VLV LIFT | VLV O/L VELOCITY |
|---|---|---|---|---|---|---|---|---|---|
| | 1. | 7.5% BMCR | 15.5 | 16 | 1.65 | 220 | | | |
| | 2. | 15% BMCR (COLD) | 31 | 15.9 | 1.7 | 220 | | | |
| | 3. | 15% BMCR (HOT) | 45 | 15.8 | 3.7 | 220 | | | |
| | | | | | | | | | |
| | | | | | | | | | |

| | | |
|---|---|---|
| | VALVE TYPE | [] CAVITATION [] FLASHING<br>[■] HIGH DP |
| | * MAX SHUT OFF PRESS ( KG/CM$^2$g) 20<br>* BODY DESIGN : PRESS (KG/CM$^2$g) \| TEMP (DEG C) 20 \| 250<br>* IBR FORM III-C [■] REQUIRED [] NOT REQUIRED | ……<br>……\|……<br>…… |
| TOTAL WEIGHT (VALVE + ACTUATOR + ACCESSORIES) Kg | | …… |

NOTES:

1. + DESIGN CV SHALL BE CHECKED FOR ALL SPECIFIED CONDITIONS.

| | DATA SHEET FOR CONTROL VALVES (WITH PNEUMATIC ACTUATOR) | SPECIFICATION NO.: PE-TS-381-145-I004 | |
|---|---|---|---|
| | | VOLUME II-B | |
| | | SECTION D | |
| | | REV. NO. 00 | DATE : 14/03/2013 |
| | | SHEET 6 OF 62 | |

Tag No. :…CRHV-6… Qty.: 1 per Unit… Date Sheet No. PES-145-06-DS1-0
KKS Tag:....LBQ10AA101

## DATA SHEET – A & B

| DATA SHEET – A FOR CONTROL VALVE (WITH PNEUMATIC ACTUATOR) (TO BE FILLED BY PURCHASER) | | | DATA SHEET – B (TO BE FILLED UP BY BIDDER) |
|---|---|---|---|
| GENERAL | PROJECT<br>SERVICE<br>LOCATION<br>DUTY<br>PIPE SIZE (inlet / outlet)<br>PIPE MATERIAL (inlet / outlet) | **SCCL–2x600 MW SINGARENI TPP**<br>D/A PEGGING FROM CRH LINE<br>[■] INDOOR [] OUTDOOR<br>[] ON/OFF [■] MODULATING<br>355.6 x 12.7 \| 813 x 23<br>SA 106 GR C \| SA 672 GR B70 | ……<br>……<br>……<br>……<br>……<br>……\|…… |
| BODY | MODEL NO.<br>TYPE OF BODY: GUIDING : NO. OF PORTS<br>BODY SIZE: PORT SIZE: DESIGN CV<br>END CONNECTION & RATING (ANSI)<br>BODY MATERIAL<br><br>PACKING: MATERIAL SINGLE / DOUBLE<br>BONNET TYPE<br>TRIM FORM<br><br>TRIM MATERIAL: SEAT \| PLUG<br>: CAGE \| GUIDE BUSH<br>FLOW<br>OUTLET VELOCITY<br><br>REQUIRED LEAKAGE CLASS<br>NOISE LEVEL (dBA) (spec. 3.1.14)<br>VACUUM SERVICE<br>ANTI CAVITATION TRIM | Bidder to Specify<br>[■] GLOBE [] ANGLE \| [] TOP [■] CAGE \| ONE<br><br>Bidder to Specify<br>[■] BWE [] SWE [] FLANGED<br>[■] A216 WCB [] A217 WC6 [] SS [] A217 CS<br>[] A351 CF8M<br>[] PTFE [■] GRAFOIL [] DOUBLE [■] SINGLE<br>[] STD [] EXTENDED [] FINNED<br>[■] LINEAR [] EQ. PERCENTAGE<br>[] QUICK OPEN (ON/OFF)<br>SS 316 STELLITED \| SS 316 STELLITED<br>SS 316 STELLITED \| SS 316 STELLITED<br>[] BELOW SEAT [] ABOVE SEAT<br>[] < 7 M/SEC (WATER) \| [■] MAC NO. < 1/3(STM)<br>[] II [] III [■] IV [] V [] VI<br>LESS THAN 85 dBA<br>[] YES [■] NO<br>[] YES [■] NO | ……<br>……\|……\|……\|……<br>……\|……\|……<br>……<br>……<br>……<br>……<br>……<br>……\|……<br>……\|……<br>……<br>……<br>……\|……<br>……<br>……<br>……<br>…… |
| PNEUMATIC ACTUATOR | MODEL NO. & SIZE<br>CLOSE AT : OPEN AT (KG/CM$^2$g)<br>TRAVEL TIME FOR<br>OPEN TO CLOSE, CLOSE TO OPEN<br>VALVE POSN. ON SIGNAL AIR FAILURE<br>VALVE POSN. ON SUPPLY AIR FAILURE | Bidder to Specify<br>0.2 \| 1<br>< 10 SEC<br>\|<br>[] TO OPEN [] STAYPUT [■] TO CLOSE<br>[■] STAYPUT | ……\|……<br>……\|……<br>……<br>……<br>……<br>…… |
| ACCESSORIES | POSITIONER (SMART ELECTRO PNEUMATIC)<br>AIR FILTER REGULATOR<br>AIR LOCK RELAY<br>POSITION LIMIT SWITCH<br>POSITION TRANSMITTER<br>SOLENOID VALVE<br>E/P CONVERTER<br>JUNCTION BOX<br>HAND WHEEL (SIDE MOUNTED)<br>LOCAL POSITION INDICATOR | [■] REQUIRED [] NOT REQUIRED<br><br>[■] REQUIRED [] NOT REQUIRED<br>[■] REQUIRED [] NOT REQUIRED<br>[■] REQUIRED [] NOT REQUIRED<br>PART OF POSITIONER<br>[■] REQUIRED [] NOT REQUIRED<br>PART OF POSITIONER<br>[■] REQUIRED [] NOT REQUIRED<br>[■] REQUIRED<br>[■] REQUIRED | ……<br>……<br>……<br>……<br>……<br>……<br>……<br>……<br>……<br>…… |
| | | | |

| | DATA SHEET FOR CONTROL VALVES (WITH PNEUMATIC ACTUATOR) | SPECIFICATION NO.: PE-TS-381-145-I004 | |
|---|---|---|---|
| | | VOLUME II-B | |
| | | SECTION D | |
| | | REV. NO. 00 | DATE : 14/03/2013 |
| | | SHEET 7 OF 62 | |

Tag No. :…CRHV-6… Qty.: 1 per Unit… Date Sheet No. PES-145-06-DS1-0
KKS Tag:....LBQ10AA101

## DATA SHEET – A & B

| DATA SHEET – A FOR CONTROL VALVE (WITH PNEUMATIC ACTUATOR) (TO BE FILLED BY PURCHASER) | | | DATA SHEET – B (TO BE FILLED UP BY BIDDER) |
|---|---|---|---|
| PERFORMANCE OF VALVE | LINEARITY | ± 2% | …… |
| | HYSTERISIS | ± 1% | …… |
| | SENSITIVITY | ± 0.5% | …… |
| | ACCURACY (OVERALL) | ± 2% | …… |

SERVICE CONDITION

| SL. No. + | LOAD | FLOW (T/HR) | INLET PR. $KG/CM^2(A)$ | OUTLET PR. $KG/CM^2(A)$ | TEMP DEG (C) | CALC ULATED CV | % VLV LIFT | VLV O/L VELOCITY |
|---|---|---|---|---|---|---|---|---|
| 1. | 15% BMCR | 44 | 12 | 3.65 | 240 | | | |
| 2. | 65% BYPASS | 172 | 33 | 3.8 | 330 | | | |
| | | | | | | | | |
| | | | | | | | | |
| | | | | | | | | |

| | |
|---|---|
| VALVE TYPE | [] CAVITATION [] FLASHING<br>[■] HIGH DP |
| * MAX SHUT OFF PRESS ( $KG/CM^2g$) 54<br>* BODY DESIGN : PRESS ($KG/CM^2g$) \| TEMP (DEG C) 54 \| 352<br>* IBR FORM III-C [■] REQUIRED [] NOT REQUIRED | ……<br>……\|……<br>…… |
| TOTAL WEIGHT (VALVE + ACTUATOR + ACCESSORIES) Kg | …… |

NOTES:

1. + DESIGN CV SHALL BE BASED ON SERVICE CONDITIONS INDICATED AT SL. NO. ___2____ AND SHALL BE CHECKED FOR ALL OTHER CONDITIONS.

| | DATA SHEET FOR CONTROL VALVES (WITH PNEUMATIC ACTUATOR) | SPECIFICATION NO.: PE-TS-381-145-I004 | |
|---|---|---|---|
| | | VOLUME II-B | |
| | | SECTION D | |
| | | REV. NO. 00 | DATE : 14/03/2013 |
| | | SHEET 8 OF 62 | |

Tag No. : CDV-22 & CDV-25 Qty.: 2 per Unit (One against each Tag No.) Date Sheet No. PES-145-06-DS1-0
KKS Tag: LCA50AA101 & LCA50AA102

## DATA SHEET – A & B

| DATA SHEET – A FOR CONTROL VALVE (WITH PNEUMATIC ACTUATOR) (TO BE FILLED BY PURCHASER) | | | DATA SHEET – B (TO BE FILLED UP BY BIDDER) |
|---|---|---|---|
| GENERAL | PROJECT<br>SERVICE<br>LOCATION<br>DUTY<br>PIPE SIZE (inlet / outlet)<br>PIPE MATERIAL (inlet / outlet) | **SCCL–2x600 MW SINGARENI TPP**<br>MAIN CONDENSATE CONTROL<br>[■] INDOOR [] OUTDOOR<br>[] ON/OFF [■] MODULATING<br>406.4 x 9.53 \| 406.4 x 9.53<br>SA 106 GR B \| SA 106 GR B | .....<br>.....<br>.....<br>.....<br>.....<br>.....\|..... |
| BODY | MODEL NO.<br>TYPE OF BODY: GUIDING : NO. OF PORTS<br>BODY SIZE: PORT SIZE: DESIGN CV<br>END CONNECTION & RATING (ANSI)<br>BODY MATERIAL<br><br>PACKING: MATERIAL SINGLE / DOUBLE<br>BONNET TYPE<br>TRIM FORM<br><br>TRIM MATERIAL: SEAT \| PLUG<br>: CAGE \| GUIDE BUSH<br>FLOW<br>OUTLET VELOCITY<br><br>REQUIRED LEAKAGE CLASS<br>NOISE LEVEL (dBA) (spec. 3.1.14)<br>VACUUM SERVICE<br>ANTI CAVITATION TRIM | Bidder to Specify<br>[■] GLOBE [] ANGLE \| [] TOP [■] CAGE \| ONE<br><br>Bidder to Specify<br>[■] BWE [] SWE [] FLANGED<br>[■] A216 WCB [] A217 WC6 [] SS [] A217 CS<br>[] A351 CF8M<br>[] PTFE [■] GRAFOIL [] DOUBLE [■] SINGLE<br>[] STD [] EXTENDED [] FINNED<br>[] LINEAR [■] EQ. PERCENTAGE<br>[] QUICK OPEN (ON/OFF)<br>SS 316 STELLITED \| SS 316 STELLITED<br>SS 316 STELLITED \| SS 316 STELLITED<br>[] BELOW SEAT [] ABOVE SEAT<br>[■] < 7 M/SEC (WATER) \| [] MAC NO. < 1/3(STM)<br>[] II [] III [■] IV [] V [] VI<br>LESS THAN 85 dBA<br>[] YES [■] NO<br>[] YES [■] NO | .....<br>.....\|.....\|.....\|.....<br>.....\|.....\|.....<br>.....<br>.....<br>.....<br>.....<br>.....<br>.....\|.....<br>.....\|.....<br>.....<br>.....<br>.....\|.....<br>.....<br>.....<br>.....<br>..... |
| PNEUMATIC ACTUATOR | MODEL NO. & SIZE<br>CLOSE AT : OPEN AT (KG/CM$^2$g)<br>*TRAVEL TIME FOR<br>OPEN TO CLOSE, CLOSE TO OPEN<br>*VALVE POSN. ON SIGNAL AIR FAILURE<br>*VALVE POSN. ON SUPPLY AIR FAILURE | Bidder to Specify<br>0.2 \| 1<br>< 10 SEC<br>\|<br>[] TO OPEN [] STAYPUT [■] TO CLOSE<br>[■] STAYPUT | .....\|.....<br>.....\|.....<br>.....<br>.....<br>.....<br>..... |
| ACCESSORIES | POSITIONER (SMART ELECTRO PNEUMATIC)<br>AIR FILTER REGULATOR<br>AIR LOCK RELAY<br>POSITION LIMIT SWITCH<br>POSITION TRANSMITTER<br>SOLENOID VALVE<br>E/P CONVERTER<br>JUNCTION BOX<br>HAND WHEEL (SIDE MOUNTED)<br>LOCAL POSITION INDICATOR | [■] REQUIRED [] NOT REQUIRED<br><br>[■] REQUIRED [] NOT REQUIRED<br>[■] REQUIRED [] NOT REQUIRED<br>[■] REQUIRED [] NOT REQUIRED<br>PART OF POSITIONER<br>[■] REQUIRED [] NOT REQUIRED<br>PART OF POSITIONER<br>[■] REQUIRED [] NOT REQUIRED<br>[■] REQUIRED<br>[■] REQUIRED | .....<br>.....<br>.....<br>.....<br>.....<br>.....<br>.....<br>.....<br>.....<br>..... |

| | DATA SHEET FOR CONTROL VALVES (WITH PNEUMATIC ACTUATOR) | SPECIFICATION NO.: PE-TS-381-145-I004 | |
|---|---|---|---|
| | | VOLUME II-B | |
| | | SECTION D | |
| | | REV. NO. 00 | DATE : 14/03/2013 |
| | | SHEET 9 OF 62 | |

Tag No. : CDV-22 & CDV-25 Qty.: 2 per Unit (One against each Tag No.) Date Sheet No. PES-145-06-DS1-0
KKS Tag: LCA50AA101 & LCA50AA102

## DATA SHEET – A & B

| DATA SHEET – A FOR CONTROL VALVE (WITH PNEUMATIC ACTUATOR) (TO BE FILLED BY PURCHASER) | | | DATA SHEET – B (TO BE FILLED UP BY BIDDER) |
|---|---|---|---|
| PERFORMANCE OF VALVE | LINEARITY | ± 2% | ..... |
| | HYSTERISIS | ± 1% | ..... |
| | SENSITIVITY | ± 0.5% | ..... |
| | ACCURACY (OVERALL) | ± 2% | ..... |

| SERVICE CONDITION | SL. No. + | LOAD | FLOW (T/HR) | INLET PR. KG/CM$^2$(A) | OUTLET PR. KG/CM$^2$(A) | TEMP DEG (C) | CALC ULATED CV | % VLV LIFT | VLV O/L VELOCITY |
|---|---|---|---|---|---|---|---|---|---|
| | 1. | DESIGN POINT | 1543 | 27.5 | 18.5 | 49.4 | | | |
| | 2. | 60% LOAD | 893.4 | 35 | 12 | 46.7 | | | |
| | 3. | 100% MCR | 1413.3 | 29 | 17 | 46.6 | | | |
| | 4. | VWO | 1476.9 | 28 | 17.5 | 46.5 | | | |
| | 5. | MIN. (10% LOAD) | 141.3 | 36.5 | 12.5 | 47.5 | | | |
| | VALVE TYPE | | | | | | [] CAVITATION [] FLASHING [■] HIGH DP | | |
| | * MAX SHUT OFF PRESS ( KG/CM$^2$g) 40<br>* BODY DESIGN : PRESS (KG/CM$^2$g) \| TEMP (DEG C) 40 \| 60<br>* IBR FORM III-C [] REQUIRED [■] NOT REQUIRED | | | | | | .....<br>.....\|.....<br>..... | | |
| | TOTAL WEIGHT (VALVE + ACTUATOR + ACCESSORIES) Kg | | | | | | ..... | | |

NOTES:

1. + DESIGN CV SHALL BE BASED ON SERVICE CONDITIONS INDICATED AT SL. NO. ___4____ AND SHALL BE CHECKED FOR ALL OTHER CONDITIONS.

| | DATA SHEET FOR CONTROL VALVES (WITH PNEUMATIC ACTUATOR) | SPECIFICATION NO.: PE-TS-381-145-I004 | |
|---|---|---|---|
| | | VOLUME II-B | |
| | | SECTION D | |
| | | REV. NO. 00 | DATE : 14/03/2013 |
| | | SHEET 10 OF 62 | |

Tag No. : CDV-10, CDV-12 Qty.: 3 per Unit (One against each Tag No.) Date Sheet No. PES-145-06-DS1-0
CDV-14
KKS tag: LCA11AA101, LCA21AA101, LCA31AA101

## DATA SHEET – A & B

| DATA SHEET – A FOR CONTROL VALVE (WITH PNEUMATIC ACTUATOR) (TO BE FILLED BY PURCHASER) | | | DATA SHEET – B (TO BE FILLED UP BY BIDDER) |
|---|---|---|---|
| GENERAL | PROJECT | **SCCL–2x600 MW SINGARENI TPP** | ..... |
| | SERVICE | CEP A/B/C MINIMUM RECIRCULATION | ..... |
| | LOCATION | [■] INDOOR [] OUTDOOR | ..... |
| | DUTY | [] ON/OFF [■] MODULATING | ..... |
| | PIPE SIZE (inlet / outlet) | 219.1 x 6.35 \| 219.1 x 6.35 | ..... |
| | PIPE MATERIAL (inlet / outlet) | SA 106 GR B \| SA 106 GR B | .....\|..... |
| BODY | MODEL NO. | Bidder to Specify | ..... |
| | TYPE OF BODY: GUIDING : NO. OF PORTS | [] GLOBE [■]ANGLE \| [] TOP [■] CAGE \| ONE | .....\|.....\|.....\|..... |
| | BODY SIZE: PORT SIZE: DESIGN CV | | .....\|.....\|..... |
| | END CONNECTION & RATING (ANSI) | Bidder to Specify | ..... |
| | BODY MATERIAL | [■] BWE [] SWE [] FLANGED | ..... |
| | | [] A216 WCB [■] A217 WC6 [] SS [] A217 CS | ..... |
| | | [] A351 CF8M | ..... |
| | PACKING: MATERIAL SINGLE / DOUBLE | [] PTFE [■] GRAFOIL [■] DOUBLE [] SINGLE | ..... |
| | BONNET TYPE | [] STD [] EXTENDED [] FINNED | ..... |
| | TRIM FORM | [■] LINEAR [] EQ. PERCENTAGE | .....\|..... |
| | | [] QUICK OPEN (ON/OFF) | .....\|..... |
| | TRIM MATERIAL: SEAT \| PLUG | 17-4 PH SS \| 17-4 PH SS | ..... |
| | : CAGE \| GUIDE BUSH | 17-4 PH SS \| 17-4 PH SS | ..... |
| | FLOW | [] BELOW SEAT [] ABOVE SEAT | .....\|..... |
| | OUTLET VELOCITY | [■] < 7 M/SEC (WATER) \| [] MAC NO. < 1/3(STM) | ..... |
| | REQUIRED LEAKAGE CLASS | [] II [] III [] IV [■] V [] VI | ..... |
| | NOISE LEVEL (dBA) (spec. 3.1.14) | LESS THAN 85 dBA | ..... |
| | VACUUM SERVICE | [■] YES [] NO | ..... |
| | ANTI CAVITATION TRIM | [■] YES [] NO | ..... |
| PNEUMATIC ACTUATOR | MODEL NO. & SIZE | PISTON TYPE | .....\|..... |
| | CLOSE AT : OPEN AT ($KG/CM^2g$) | 1 \| 0.2 | .....\|..... |
| | TRAVEL TIME FOR OPEN TO CLOSE, CLOSE TO OPEN | < 10 SEC \| | ..... |
| | VALVE POSN. ON SIGNAL AIR FAILURE | [■] TO OPEN [] STAYPUT [] TO CLOSE | ..... |
| | VALVE POSN. ON SUPPLY AIR FAILURE | [■] STAYPUT | ..... |
| ACCESSORIES | POSITIONER (SMART ELECTRO PNEUMATIC) | [■] REQUIRED [] NOT REQUIRED | ..... |
| | AIR FILTER REGULATOR | [■] REQUIRED [] NOT REQUIRED | ..... |
| | AIR LOCK RELAY | [■] REQUIRED [] NOT REQUIRED | ..... |
| | POSITION LIMIT SWITCH | [■] REQUIRED [] NOT REQUIRED | ..... |
| | POSITION TRANSMITTER | PART OF POSITIONER | ..... |
| | SOLENOID VALVE | [■] REQUIRED [] NOT REQUIRED | ..... |
| | E/P CONVERTER | PART OF POSITIONER | ..... |
| | JUNCTION BOX | [■] REQUIRED [] NOT REQUIRED | ..... |
| | HAND WHEEL (SIDE MOUNTED) | [■] REQUIRED | ..... |
| | LOCAL POSITION INDICATOR | [■] REQUIRED | ..... |

| | DATA SHEET FOR CONTROL VALVES (WITH PNEUMATIC ACTUATOR) | SPECIFICATION NO.: PE-TS-381-145-I004 | |
|---|---|---|---|
| | | VOLUME II-B | |
| | | SECTION D | |
| | | REV. NO. 00 | DATE : 14/03/2013 |
| | | SHEET 11 OF 62 | |

Tag No. : CDV-10, CDV-12 Qty.: 3 per Unit (One against each Tag No.) Date Sheet No. PES-145-06-DS1-0
CDV-14
KKS Tag: LCA11AA101, LCA21AA101, LCA31AA101

## DATA SHEET – A & B

| DATA SHEET – A FOR CONTROL VALVE (WITH PNEUMATIC ACTUATOR) (TO BE FILLED BY PURCHASER) | | | DATA SHEET – B (TO BE FILLED UP BY BIDDER) |
|---|---|---|---|
| PERFORMANCE OF VALVE | LINEARITY | ± 2% | ..... |
| | HYSTERISIS | ± 1% | ..... |
| | SENSITIVITY | ± 0.5% | ..... |
| | ACCURACY (OVERALL) | ± 2% | ..... |

SERVICE CONDITION

| SL. No. + | LOAD | FLOW (T/HR) | INLET PR. $KG/CM^2(A)$ | OUTLET PR. $KG/CM^2(A)$ | TEMP DEG (C) | CALC ULATED CV | % VLV LIFT | VLV O/L VELOCITY |
|---|---|---|---|---|---|---|---|---|
| 1. | MIN. | 30 | 37 | 0.6 | 46.9 | | | |
| 2. | NORMAL MAX. | 300 | 36 | 1.5 | 46.9 | | | |
| 3. | NORMAL (MAX.) 51.5 HZ | 310 | 35.5 | 0.6 | 49.7 | | | |
| | | | | | | | | |
| | | | | | | | | |

| | |
|---|---|
| VALVE TYPE | [■] CAVITATION [] FLASHING<br>[■] HIGH DP |
| * MAX SHUT OFF PRESS ( $KG/CM^2g$) 40<br>* BODY DESIGN : PRESS ($KG/CM^2g$) \| TEMP (DEG C) 40/VACUUM \| 60<br>* IBR FORM III-C [] REQUIRED [■] NOT REQUIRED | .....<br>.....\|.....<br>..... |
| TOTAL WEIGHT (VALVE + ACTUATOR + ACCESSORIES) Kg | ..... |

NOTES:

1. + DESIGN CV SHALL BE BASED ON SERVICE CONDITIONS INDICATED AT SL. NO. ___2____ AND SHALL BE CHECKED FOR ALL OTHER CONDITIONS.

| | DATA SHEET FOR CONTROL VALVES (WITH PNEUMATIC ACTUATOR) | SPECIFICATION NO.: PE-TS-381-145-I004 | |
|---|---|---|---|
| | | VOLUME II-B | |
| | | SECTION D | |
| | | REV. NO. 00 | DATE : 14/03/2013 |
| | | SHEET 12 OF 62 | |

Tag No. :…CDV-43… Qty.: …1 per Unit… Date Sheet No. PES-145-06-DS1-0
KKS Tag:...LCA52AA101

## DATA SHEET – A & B

| DATA SHEET – A FOR CONTROL VALVE (WITH PNEUMATIC ACTUATOR) (TO BE FILLED BY PURCHASER) | | | DATA SHEET – B (TO BE FILLED UP BY BIDDER) |
|---|---|---|---|
| GENERAL | PROJECT<br>SERVICE<br>LOCATION<br>DUTY<br>PIPE SIZE (inlet / outlet)<br>PIPE MATERIAL (inlet / outlet) | **SCCL–2x600 MW SINGARENI TPP**<br>EXCESS DUMP CONTROL<br>[■] INDOOR [] OUTDOOR<br>[] ON/OFF [■] MODULATING<br>219.1 x 6.35 \| 219.1 x 6.35<br>SA 106 GR B \| SA 106 GR B | ……<br>……<br>……<br>……<br>……<br>……\|…… |
| BODY | MODEL NO.<br>TYPE OF BODY: GUIDING : NO. OF PORTS<br>BODY SIZE: PORT SIZE: DESIGN CV<br>END CONNECTION & RATING (ANSI)<br>BODY MATERIAL<br><br>PACKING: MATERIAL SINGLE / DOUBLE<br>BONNET TYPE<br>TRIM FORM<br><br>TRIM MATERIAL: SEAT \| PLUG<br>: CAGE \| GUIDE BUSH<br><br>FLOW<br>OUTLET VELOCITY<br><br>REQUIRED LEAKAGE CLASS<br>NOISE LEVEL (dBA) (spec. 3.1.14)<br>VACUUM SERVICE<br>ANTI CAVITATION TRIM | Bidder to Specify<br>[] GLOBE [■] ANGLE \| [] TOP [■] CAGE \| ONE<br><br>Bidder to Specify<br>[■] BWE [] SWE [] FLANGED<br>[] A216 WCB [■] A217 WC6 [] SS [] A217 CS<br>[] A351 CF8M<br>[] PTFE [■] GRAFOIL [] DOUBLE [■] SINGLE<br>[] STD [] EXTENDED [] FINNED<br>[■] LINEAR [] EQ. PERCENTAGE<br>[] QUICK OPEN (ON/OFF)<br>17-4 PH SS \| 17-4 PH SS<br>17-4 PH SS \| 17-4 PH SS<br><br>[] BELOW SEAT [] ABOVE SEAT<br>[■]< 7 M/SEC (WATER) \| [] MAC NO. < 1/3(STM)<br>[] II [] III [] IV [■] V [] VI<br>LESS THAN 85 dBA<br>[] YES [■] NO<br>[■] YES [] NO | ……<br>……\|……\|……\|……<br>……\|……\|……<br>……<br>……<br>……<br>……<br>……<br>……\|……<br>……\|……<br>……<br>……<br>……\|……<br>……<br>……<br>……<br>…… |
| PNEUMATIC ACTUATOR | MODEL NO. & SIZE<br>CLOSE AT : OPEN AT (KG/CM$^2$g)<br>TRAVEL TIME FOR<br>OPEN TO CLOSE, CLOSE TO OPEN<br>VALVE POSN. ON SIGNAL AIR FAILURE<br>VALVE POSN. ON SUPPLY AIR FAILURE | Bidder to Specify<br>1 \| 0.2<br>< 10 SEC<br>\|<br>[■] TO OPEN [] STAYPUT [] TO CLOSE<br>[■] STAYPUT | ……\|……<br>……\|……<br>……<br>……<br>……<br>…… |
| ACCESSORIES | POSITIONER (SMART ELECTRO PNEUMATIC)<br>AIR FILTER REGULATOR<br>AIR LOCK RELAY<br>POSITION LIMIT SWITCH<br>POSITION TRANSMITTER<br>SOLENOID VALVE<br>E/P CONVERTER<br>JUNCTION BOX<br>HAND WHEEL (SIDE MOUNTED)<br>LOCAL POSITION INDICATOR | [■] REQUIRED [] NOT REQUIRED<br><br>[■] REQUIRED [] NOT REQUIRED<br>[■] REQUIRED [] NOT REQUIRED<br>[■] REQUIRED [] NOT REQUIRED<br>PART OF POSITIONER<br>[■] REQUIRED [] NOT REQUIRED<br>PART OF POSITIONER<br>[■] REQUIRED [] NOT REQUIRED<br>[■] REQUIRED<br>[■] REQUIRED | ……<br>……<br>……<br>……<br>……<br>……<br>……<br>……<br>……<br>…… |

| | DATA SHEET FOR CONTROL VALVES (WITH PNEUMATIC ACTUATOR) | SPECIFICATION NO.: PE-TS-381-145-I004 | |
|---|---|---|---|
| | | VOLUME II-B | |
| | | SECTION D | |
| | | REV. NO. 00 | DATE : 14/03/2013 |
| | | SHEET 13 OF 62 | |

Tag No. :…CDV-43… Qty.: …1 per Unit… Date Sheet No. PES-145-06-DS1-0
KKS Tag:...LCA52AA101

## DATA SHEET – A & B

| DATA SHEET – A FOR CONTROL VALVE (WITH PNEUMATIC ACTUATOR) (TO BE FILLED BY PURCHASER) | | | DATA SHEET – B (TO BE FILLED UP BY BIDDER) |
|---|---|---|---|
| PERFORMANCE OF VALVE | LINEARITY | ± 2% | …… |
| | HYSTERISIS | ± 1% | …… |
| | SENSITIVITY | ± 0.5% | …… |
| | ACCURACY (OVERALL) | ± 2% | …… |

SERVICE CONDITION

| SL. No. + | LOAD | FLOW (T/HR) | INLET PR. $KG/CM^2(A)$ | OUTLET PR. $KG/CM^2(A)$ | TEMP DEG (C) | CALC ULATED CV | % VLV LIFT | VLV O/L VELOCITY |
|---|---|---|---|---|---|---|---|---|
| 1. | MIN. | 40 | 35 | 4.0 | 46.9 | | | |
| 2. | NORMAL / MAX | 350 | 25 | 4.0 | 50.7 | | | |
| | | | | | | | | |
| | | | | | | | | |
| | | | | | | | | |

| | |
|---|---|
| VALVE TYPE | [■] CAVITATION [] FLASHING<br>[■] HIGH DP |
| * MAX SHUT OFF PRESS ( $KG/CM^2g$)<br>* BODY DESIGN : PRESS ($KG/CM^2g$) \| TEMP (DEG C)<br>* IBR FORM III-C [] REQUIRED [■] NOT REQUIRED | 40<br>40 \| 60 |
| TOTAL WEIGHT (VALVE + ACTUATOR + ACCESSORIES) Kg | …… |

NOTES:

1. + DESIGN CV SHALL BE BASED ON SERVICE CONDITIONS INDICATED AT SL. NO. ___2____ AND SHALL BE CHECKED FOR ALL OTHER CONDITIONS.

| | DATA SHEET FOR CONTROL VALVES (WITH PNEUMATIC ACTUATOR) | SPECIFICATION NO.: PE-TS-381-145-I004 | |
|---|---|---|---|
| | | VOLUME II-B | |
| | | SECTION D | |
| | | REV. NO. 00 | DATE : 14/03/2013 |
| | | SHEET 14 OF 62 | |

Tag No. :…CDV-39… Qty.: …1 per Unit… Date Sheet No. PES-145-06-DS1-0
KKS Tag:...LCA51AA101

## DATA SHEET – A & B

| DATA SHEET – A FOR CONTROL VALVE (WITH PNEUMATIC ACTUATOR) (TO BE FILLED BY PURCHASER) | | | DATA SHEET – B (TO BE FILLED UP BY BIDDER) |
|---|---|---|---|
| GENERAL | PROJECT | **SCCL–2x600 MW SINGARENI TPP** | …… |
| | SERVICE | GSC MIN. FLOW RECIRCULATION | …… |
| | LOCATION | [■] INDOOR [] OUTDOOR | …… |
| | DUTY | [] ON/OFF [■] MODULATING | …… |
| | PIPE SIZE (inlet / outlet) | 219.1 x 6.35 \| 219.1 x 6.35 | …… |
| | PIPE MATERIAL (inlet / outlet) | SA 106 GR B \| SA 106 GR B | ……\|…… |
| BODY | MODEL NO. | Bidder to Specify | …… |
| | TYPE OF BODY: GUIDING : NO. OF PORTS | [] GLOBE [■] ANGLE \| [] TOP [■] CAGE \| ONE | ……\|……\|……\|…… |
| | BODY SIZE: PORT SIZE: DESIGN CV | Bidder to Specify | ……\|……\|…… |
| | END CONNECTION & RATING (ANSI) | [■] BWE [] SWE [] FLANGED | …… |
| | BODY MATERIAL | [] A216 WCB [■] A217 WC6 [] SS [] A217 CS [] A351 CF8M | …… |
| | PACKING: MATERIAL SINGLE / DOUBLE | [] PTFE [■] GRAFOIL [■] DOUBLE [] SINGLE | …… |
| | BONNET TYPE | [] STD [] EXTENDED [] FINNED | …… |
| | TRIM FORM | [■] LINEAR [] EQ. PERCENTAGE [] QUICK OPEN (ON/OFF) | ……\|…… |
| | TRIM MATERIAL: SEAT \| PLUG | 17-4 PH SS \| 17-4 PH SS | ……\|…… |
| | : CAGE \| GUIDE BUSH | 17-4 PH SS \| 17-4 PH SS | …… |
| | FLOW | [] BELOW SEAT [] ABOVE SEAT | …… |
| | OUTLET VELOCITY | [■]< 7 M/SEC (WATER) \| [] MAC NO. < 1/3(STM) | ……\|…… |
| | REQUIRED LEAKAGE CLASS | [] II [] III [] IV [■] V [] VI | …… |
| | NOISE LEVEL (dBA) (spec. 3.1.14) | LESS THAN 85 dBA | …… |
| | VACUUM SERVICE | [■] YES [] NO | …… |
| | ANTI CAVITATION TRIM | [■] YES [] NO | …… |
| PNEUMATIC ACTUATOR | MODEL NO. & SIZE | Bidder to Specify | ……\|…… |
| | CLOSE AT : OPEN AT (KG/CM$^2$g) | 1 \| 0.2 | ……\|…… |
| | TRAVEL TIME FOR OPEN TO CLOSE, CLOSE TO OPEN | < 10 SEC \| | …… |
| | VALVE POSN. ON SIGNAL AIR FAILURE | [■] TO OPEN [] STAYPUT [] TO CLOSE | …… |
| | VALVE POSN. ON SUPPLY AIR FAILURE | [■] STAYPUT | …… |
| ACCESSORIES | POSITIONER (SMART ELECTRO PNEUMATIC) | [■] REQUIRED [] NOT REQUIRED | …… |
| | AIR FILTER REGULATOR | [■] REQUIRED [] NOT REQUIRED | …… |
| | AIR LOCK RELAY | [■] REQUIRED [] NOT REQUIRED | …… |
| | POSITION LIMIT SWITCH | [■] REQUIRED [] NOT REQUIRED | …… |
| | POSITION TRANSMITTER | PART OF POSITIONER | …… |
| | SOLENOID VALVE | [■] REQUIRED [] NOT REQUIRED | …… |
| | E/P CONVERTER | PART OF POSITIONER | …… |
| | JUNCTION BOX | [■] REQUIRED [] NOT REQUIRED | …… |
| | HAND WHEEL (SIDE MOUNTED) | [■] REQUIRED | …… |
| | LOCAL POSITION INDICATOR | [■] REQUIRED | …… |

| | DATA SHEET FOR CONTROL VALVES (WITH PNEUMATIC ACTUATOR) | SPECIFICATION NO.: PE-TS-381-145-I004 | |
|---|---|---|---|
| | | VOLUME II-B | |
| | | SECTION D | |
| | | REV. NO. 00 | DATE : 14/03/2013 |
| | | SHEET 15 OF 62 | |

Tag No. :…CDV-39… Qty.: …1 per Unit… Date Sheet No. PES-145-06-DS1-0
KKS Tag:...LCA51AA101

## DATA SHEET – A & B

| DATA SHEET – A FOR CONTROL VALVE (WITH PNEUMATIC ACTUATOR) (TO BE FILLED BY PURCHASER) | | | DATA SHEET – B (TO BE FILLED UP BY BIDDER) |
|---|---|---|---|
| PERFORMANCE OF VALVE | LINEARITY | ± 2% | …… |
| | HYSTERISIS | ± 1% | …… |
| | SENSITIVITY | ± 0.5% | …… |
| | ACCURACY (OVERALL) | ± 2% | …… |

SERVICE CONDITION

| SL. No. + | LOAD | FLOW (T/HR) | INLET PR. $KG/CM^2(A)$ | OUTLET PR. $KG/CM^2(A)$ | TEMP DEG (C) | CALC ULATED CV | % VLV LIFT | VLV O/L VELOCITY |
|---|---|---|---|---|---|---|---|---|
| 1. | MIN. | 30 | 35 | 0.3 | 46.9 | | | |
| 2. | MAX | 300 | 25 | 0.6 | 50.7 | | | |
| | | | | | | | | |
| | | | | | | | | |
| | | | | | | | | |

| | |
|---|---|
| VALVE TYPE | [■] CAVITATION [] FLASHING<br>[■] HIGH DP |
| * MAX SHUT OFF PRESS ( $KG/CM^2g$) 40<br>* BODY DESIGN : PRESS ($KG/CM^2g$) \| TEMP (DEG C) 40/VACUUM \| 60<br>* IBR FORM III-C [] REQUIRED [■] NOT REQUIRED | ……<br>……\|……<br>…… |
| TOTAL WEIGHT (VALVE + ACTUATOR + ACCESSORIES) Kg | …… |

NOTES:

1. + DESIGN CV SHALL BE BASED ON SERVICE CONDITIONS INDICATED AT SL. NO. ___2____ AND SHALL BE CHECKED FOR ALL OTHER CONDITIONS.

| | DATA SHEET FOR CONTROL VALVES (WITH PNEUMATIC ACTUATOR) | SPECIFICATION NO.: PE-TS-381-145-I004 | |
|---|---|---|---|
| | | VOLUME II-B | |
| | | SECTION D | |
| | | REV. NO. 00 | DATE : 14/03/2013 |
| | | SHEET 16 OF 62 | |

Tag No. :…CDV-67… Qty.: …1 per Unit… Date Sheet No. PES-145-06-DS1-0
KKS Tag:...LCA34AA101

## DATA SHEET – A & B

| DATA SHEET – A FOR CONTROL VALVE (WITH PNEUMATIC ACTUATOR) (TO BE FILLED BY PURCHASER) | | | DATA SHEET – B (TO BE FILLED UP BY BIDDER) |
|---|---|---|---|
| GENERAL | PROJECT<br>SERVICE<br>LOCATION<br>DUTY<br>PIPE SIZE (inlet / outlet)<br>PIPE MATERIAL (inlet / outlet) | **SCCL–2x600 MW SINGARENI TPP**<br>CONDENSATE FOR FLASH TANK-A<br>[■] INDOOR [] OUTDOOR<br>[■] ON/OFF [] MODULATING<br>33.4 x 4.55 \| 33.4 x 4.55<br>SA 106 GR B \| SA 106 GR B | ……<br>……<br>……<br>……<br>……<br>……\|…… |
| BODY | MODEL NO.<br>TYPE OF BODY: GUIDING : NO. OF PORTS<br>BODY SIZE: PORT SIZE: DESIGN CV<br>END CONNECTION & RATING (ANSI)<br>BODY MATERIAL<br><br>PACKING: MATERIAL SINGLE / DOUBLE<br>BONNET TYPE<br>TRIM FORM<br><br>TRIM MATERIAL: SEAT \| PLUG<br>: CAGE \| GUIDE BUSH<br>FLOW<br>OUTLET VELOCITY<br><br>REQUIRED LEAKAGE CLASS<br>NOISE LEVEL (dBA) (spec. 3.1.14)<br>VACUUM SERVICE<br>ANTI CAVITATION TRIM | Bidder to Specify<br>[■] GLOBE [] ANGLE \| [] TOP [■] CAGE \| ONE<br><br>Bidder to Specify<br>[] BWE [■] SWE [] FLANGED<br>[] A216 WCB [■] A217 WC6 [] SS [] A217 CS<br>[] A351 CF8M<br>[] PTFE [■] GRAFOIL [■] DOUBLE [] SINGLE<br>[] STD [] EXTENDED [] FINNED<br>[] LINEAR [] EQ. PERCENTAGE<br>[■] QUICK OPEN (ON/OFF)<br>17-4 PH SS \| 17-4 PH SS<br>17-4 PH SS \| 17-4 PH SS<br>[] BELOW SEAT [] ABOVE SEAT<br>[■] < 7 M/SEC (WATER) \| [] MAC NO. < 1/3(STM)<br>[] II [] III [] IV [■] V [] VI<br>LESS THAN 85 dBA<br>[■] YES [] NO<br>[■] YES [] NO | ……<br>……\|……\|……\|……<br>……\|……\|……<br>……<br>……<br>……<br>……<br>……<br>……\|……<br>……\|……<br>……<br>……<br>……\|……<br>……<br>……<br>……<br>…… |
| PNEUMATIC ACTUATOR | MODEL NO. & SIZE<br>CLOSE AT : OPEN AT (KG/CM$^2$g)<br>TRAVEL TIME FOR<br>OPEN TO CLOSE, CLOSE TO OPEN<br>VALVE POSN. ON SIGNAL AIR FAILURE<br>VALVE POSN. ON SUPPLY AIR FAILURE | Bidder to Specify<br>1 \| 0.2<br>< 10 SEC<br>\|<br>[■] TO OPEN [] STAYPUT [] TO CLOSE<br>[■] STAYPUT | ……\|……<br>……\|……<br>……<br>……<br>……<br>…… |
| ACCESSORIES | POSITIONER (SMART ELECTRO PNEUMATIC)<br>AIR FILTER REGULATOR<br>AIR LOCK RELAY<br>POSITION LIMIT SWITCH<br>POSITION TRANSMITTER<br>SOLENOID VALVE<br>E/P CONVERTER<br>JUNCTION BOX<br>HAND WHEEL (SIDE MOUNTED)<br>LOCAL POSITION INDICATOR | [] REQUIRED [■] NOT REQUIRED<br><br>[■] REQUIRED [] NOT REQUIRED<br>[■] REQUIRED [] NOT REQUIRED<br>[■] REQUIRED [] NOT REQUIRED<br>[] REQUIRED [■] NOT REQUIRED<br>[■] REQUIRED [] NOT REQUIRED<br>[] REQUIRED [■] NOT REQUIRED<br>[■] REQUIRED [] NOT REQUIRED<br>[■] REQUIRED<br>[] REQUIRED [■] NOT REQUIRED | ……<br>……<br>……<br>……<br>……<br>……<br>……<br>……<br>……<br>……<br>…… |

| | DATA SHEET FOR CONTROL VALVES (WITH PNEUMATIC ACTUATOR) | SPECIFICATION NO.: PE-TS-381-145-I004 | |
|---|---|---|---|
| | | VOLUME II-B | |
| | | SECTION D | |
| | | REV. NO. 00 | DATE : 14/03/2013 |
| | | SHEET 17 OF 62 | |

Tag No. :…CDV-67… Qty.: …1 per Unit… Date Sheet No. PES-145-06-DS1-0
KKS Tag:...LCA34AA101

## DATA SHEET – A & B

| DATA SHEET – A FOR CONTROL VALVE (WITH PNEUMATIC ACTUATOR) (TO BE FILLED BY PURCHASER) | | | DATA SHEET – B (TO BE FILLED UP BY BIDDER) |
|---|---|---|---|
| PERFORMANCE OF VALVE | LINEARITY | ± 2% | …… |
| | HYSTERISIS | ± 1% | …… |
| | SENSITIVITY | ± 0.5% | …… |
| | ACCURACY (OVERALL) | ± 2% | …… |

SERVICE CONDITION

| SL. No. + | LOAD | FLOW (T/HR) | INLET PR. KG/CM$^2$(A) | OUTLET PR. KG/CM$^2$(A) | TEMP DEG (C) | CALC ULATED CV | % VLV LIFT | VLV O/L VELOCITY |
|---|---|---|---|---|---|---|---|---|
| 1. | MAX. | 10 | 25 TO 35 | 0.2 TO 0.4 | 46.9 TO 50.7 | | | |
| | | | | | | | | |
| | | | | | | | | |
| | | | | | | | | |
| | | | | | | | | |

| | |
|---|---|
| VALVE TYPE | [■] CAVITATION [] FLASHING<br>[■] HIGH DP |
| * MAX SHUT OFF PRESS ( KG/CM$^2$g) 40<br>* BODY DESIGN : PRESS (KG/CM$^2$g) \| TEMP (DEG C) 40/ VACUUM \| 55<br>* IBR FORM III-C [] REQUIRED [■] NOT REQUIRED | ……<br>……\|……<br>…… |
| TOTAL WEIGHT (VALVE + ACTUATOR + ACCESSORIES) Kg | …… |

NOTES:

1. + DESIGN CV SHALL BE BASED ON SERVICE CONDITIONS INDICATED AT SL. NO. ___1____ AND SHALL BE CHECKED FOR ALL OTHER CONDITIONS.

Tag No. :…CDV-72… Qty.: …1 per Unit… Date Sheet No. PES-145-06-DS1-0
KKS Tag:...LCA53AA101

## DATA SHEET – A & B

| DATA SHEET – A FOR CONTROL VALVE (WITH PNEUMATIC ACTUATOR) (TO BE FILLED BY PURCHASER) | | | DATA SHEET – B (TO BE FILLED UP BY BIDDER) |
|---|---|---|---|
| GENERAL | PROJECT<br>SERVICE<br>LOCATION<br>DUTY<br>PIPE SIZE (inlet / outlet)<br>PIPE MATERIAL (inlet / outlet) | **SCCL–2x600 MW SINGARENI TPP**<br>CONDENSATE FOR VALVE GLAND SEALING<br>[■] INDOOR [] OUTDOOR<br>[] ON/OFF [■] MODULATING<br>60.3 x 5.54 \| 60.3 x 5.54<br>SA 106 GR B \| SA 106 GR B | ……<br>……<br>……<br>……<br>……<br>……\|…… |
| BODY | MODEL NO.<br>TYPE OF BODY: GUIDING : NO. OF PORTS<br>BODY SIZE: PORT SIZE: DESIGN CV<br>END CONNECTION & RATING (ANSI)<br>BODY MATERIAL<br><br>PACKING: MATERIAL SINGLE / DOUBLE<br>BONNET TYPE<br>TRIM FORM<br><br>TRIM MATERIAL: SEAT \| PLUG<br>: CAGE \| GUIDE BUSH<br>FLOW<br>OUTLET VELOCITY<br><br>REQUIRED LEAKAGE CLASS<br>NOISE LEVEL (dBA) (spec. 3.1.14)<br>VACUUM SERVICE<br>ANTI CAVITATION TRIM | Bidder to Specify<br>[■] GLOBE [] ANGLE \| [] TOP [■] CAGE \| ONE<br><br>Bidder to Specify<br>[■] BWE [] SWE [] FLANGED<br>[] A216 WCB [■] A217 WC6 [] SS [] A217 CS<br>[] A351 CF8M<br>[] PTFE [■] GRAFOIL [] DOUBLE [■] SINGLE<br>[] STD [] EXTENDED [] FINNED<br>[] LINEAR [■] EQ. PERCENTAGE<br>[] QUICK OPEN (ON/OFF)<br>17-4 PH SS \| 17-4 PH SS<br>17-4 PH SS \| 17-4 PH SS<br>[] BELOW SEAT [] ABOVE SEAT<br>[■] < 7 M/SEC (WATER) \| [] MAC NO. < 1/3(STM)<br>[] II [] III [] IV [■] V [] VI<br>LESS THAN 85 dBA<br>[] YES [■] NO<br>[■] YES [] NO | ……<br>……\|……\|……\|……<br>……\|……\|……<br>……<br>……<br>……<br>……<br>……<br>……\|……<br>……\|……<br>……<br>……<br>……\|……<br>……<br>……<br>……<br>…… |
| PNEUMATIC ACTUATOR | MODEL NO. & SIZE<br>CLOSE AT : OPEN AT (KG/CM$^2$g)<br>TRAVEL TIME FOR<br>OPEN TO CLOSE, CLOSE TO OPEN<br>VALVE POSN. ON SIGNAL AIR FAILURE<br>VALVE POSN. ON SUPPLY AIR FAILURE | Bidder to Specify<br>1 \| 0.2<br>< 10 SEC<br>\|<br>[■] TO OPEN [] STAYPUT [] TO CLOSE<br>[■] STAYPUT | ……\|……<br>……\|……<br>……<br>……<br>……<br>…… |
| ACCESSORIES | POSITIONER (SMART ELECTRO PNEUMATIC)<br>AIR FILTER REGULATOR<br>AIR LOCK RELAY<br>POSITION LIMIT SWITCH<br>POSITION TRANSMITTER<br>SOLENOID VALVE<br>E/P CONVERTER<br>JUNCTION BOX<br>HAND WHEEL (SIDE MOUNTED)<br>LOCAL POSITION INDICATOR | [■] REQUIRED [] NOT REQUIRED<br><br>[■] REQUIRED [] NOT REQUIRED<br>[■] REQUIRED [] NOT REQUIRED<br>[■] REQUIRED [] NOT REQUIRED<br>PART OF POSITIONER<br>[■] REQUIRED [] NOT REQUIRED<br>PART OF POSITIONER<br>[■] REQUIRED [] NOT REQUIRED<br>[■] REQUIRED<br>[■] REQUIRED | ……<br>……<br>……<br>……<br>……<br>……<br>……<br>……<br>……<br>…… |

Tag No. :…CDV-72… Qty.: …1 per Unit… Date Sheet No. PES-145-06-DS1-0
KKS Tag:...LCA53AA101

## DATA SHEET – A & B

| DATA SHEET – A FOR CONTROL VALVE (WITH PNEUMATIC ACTUATOR) (TO BE FILLED BY PURCHASER) | | | DATA SHEET – B (TO BE FILLED UP BY BIDDER) |
|---|---|---|---|
| PERFORMANCE OF VALVE | LINEARITY | ± 2% | …… |
| | HYSTERISIS | ± 1% | …… |
| | SENSITIVITY | ± 0.5% | …… |
| | ACCURACY (OVERALL) | ± 2% | …… |

SERVICE CONDITION

| SL. No. + | LOAD | FLOW (T/HR) | INLET PR. KG/CM$^2$(A) | OUTLET PR. KG/CM$^2$(A) | TEMP DEG (C) | CALC ULATED CV | % VLV LIFT | VLV O/L VELOCITY |
|---|---|---|---|---|---|---|---|---|
| 1. | MAX. | 4 | 25 TO 35 | 3.5 | 46.9 TO 50.7 | | | |
| | | | | | | | | |
| | | | | | | | | |
| | | | | | | | | |
| | | | | | | | | |

| | |
|---|---|
| VALVE TYPE | [] CAVITATION [] FLASHING [■] HIGH DP |
| * MAX SHUT OFF PRESS ( KG/CM$^2$g) 40<br>* BODY DESIGN : PRESS (KG/CM$^2$g) \| TEMP (DEG C) 40 \| 60<br>* IBR FORM III-C [] REQUIRED [■] NOT REQUIRED | ……<br>……\|……<br>…… |
| TOTAL WEIGHT (VALVE + ACTUATOR + ACCESSORIES) Kg | …… |

NOTES:

1. + DESIGN CV SHALL BE BASED ON SERVICE CONDITIONS INDICATED AT SL. NO. ___1____ AND SHALL BE CHECKED FOR ALL OTHER CONDITIONS.
2. VALVE MATERIAL SHALL BE A217WC6 AND ANTI-CAVITATION TYPE TRIM IN CASE THE VALVE IS SUBJECTED TO CAVITATION FOR THE GIVEN CONDITION.

| | DATA SHEET FOR CONTROL VALVES (WITH PNEUMATIC ACTUATOR) | SPECIFICATION NO.: PE-TS-381-145-I004 | |
|---|---|---|---|
| | | VOLUME II-B | |
| | | SECTION D | |
| | | REV. NO. 00 | DATE : 14/03/2013 |
| | | SHEET 20 OF 62 | |

Tag No. :…DRV-53… Qty.: …1 per Unit… Date Sheet No. PES-145-06-DS1-0
KKS Tag:...LCH50AA101

## DATA SHEET – A & B

| DATA SHEET – A FOR CONTROL VALVE (WITH PNEUMATIC ACTUATOR) (TO BE FILLED BY PURCHASER) | | | DATA SHEET – B (TO BE FILLED UP BY BIDDER) |
|---|---|---|---|
| GENERAL | PROJECT<br>SERVICE<br>LOCATION<br>DUTY<br>PIPE SIZE (inlet / outlet)<br>PIPE MATERIAL (inlet / outlet) | **SCCL–2x600 MW SINGARENI TPP**<br>HPH-7A NORMAL DRAIN TO HPH-6A<br>[■] INDOOR [] OUTDOOR<br>[] ON/OFF [■] MODULATING<br>168.3 x 10.97 \| 168.3 x 10.97<br>SA 106 GR B \| SA 106 GR B | ……<br>……<br>……<br>……<br>……<br>……\|…… |
| BODY | MODEL NO.<br>TYPE OF BODY: GUIDING : NO. OF PORTS<br>BODY SIZE: PORT SIZE: DESIGN CV<br>END CONNECTION & RATING (ANSI)<br>BODY MATERIAL<br><br>PACKING: MATERIAL SINGLE / DOUBLE<br>BONNET TYPE<br>TRIM FORM<br><br>TRIM MATERIAL: SEAT \| PLUG<br>: CAGE \| GUIDE BUSH<br>FLOW<br>OUTLET VELOCITY<br><br>REQUIRED LEAKAGE CLASS<br>NOISE LEVEL (dBA) (spec. 3.1.14)<br>VACUUM SERVICE<br>ANTI CAVITATION TRIM | Bidder to Specify<br>[■] GLOBE [] ANGLE \| [] TOP [■] CAGE \| ONE<br><br>Bidder to Specify<br>[■] BWE [] SWE [] FLANGED<br>[] A216 WCB [■] A217 WC6 [] SS [] A217 CS<br>[] A351 CF8M<br>[] PTFE [■] GRAFOIL [] DOUBLE [■] SINGLE<br>[] STD [] EXTENDED [] FINNED<br>[■] LINEAR [] EQ. PERCENTAGE<br>[] QUICK OPEN (ON/OFF)<br>17-4 PH SS \| 17-4 PH SS<br>17-4 PH SS \| 17-4 PH SS<br>[] BELOW SEAT [] ABOVE SEAT<br>[■] < 7 M/SEC (WATER) \| [] MAC NO. < 1/3(STM)<br>[] II [] III [■] IV [] V [] VI<br>LESS THAN 85 dBA<br>[] YES [■] NO<br>[] YES [■] NO | ……<br>……\|……\|……\|……<br>……\|……\|……<br>……<br>……<br>……<br>……<br>……<br>……\|……<br>……\|……<br>……<br>……<br>……\|……<br>……<br>……<br>……<br>…… |
| PNEUMATIC ACTUATOR | MODEL NO. & SIZE<br>CLOSE AT : OPEN AT (KG/CM$^2$g)<br>TRAVEL TIME FOR<br>OPEN TO CLOSE, CLOSE TO OPEN<br>VALVE POSN. ON SIGNAL AIR FAILURE<br>VALVE POSN. ON SUPPLY AIR FAILURE | Bidder to Specify<br>0.2 \| 1<br>< 10 SEC<br>\|<br>[] TO OPEN [] STAYPUT [■] TO CLOSE<br>[■] STAYPUT | ……\|……<br>……\|……<br>……<br>……<br>……<br>…… |
| ACCESSORIES | POSITIONER (SMART ELECTRO PNEUMATIC)<br>AIR FILTER REGULATOR<br>AIR LOCK RELAY<br>POSITION LIMIT SWITCH<br>POSITION TRANSMITTER<br>SOLENOID VALVE<br>E/P CONVERTER<br>JUNCTION BOX<br>HAND WHEEL (SIDE MOUNTED)<br>LOCAL POSITION INDICATOR | [■] REQUIRED [] NOT REQUIRED<br><br>[■] REQUIRED [] NOT REQUIRED<br>[■] REQUIRED [] NOT REQUIRED<br>[■] REQUIRED [] NOT REQUIRED<br>PART OF POSITIONER<br>[■] REQUIRED [] NOT REQUIRED<br>PART OF POSITIONER<br>[■] REQUIRED [] NOT REQUIRED<br>[■] REQUIRED<br>[■] REQUIRED | ……<br>……<br>……<br>……<br>……<br>……<br>……<br>……<br>……<br>…… |

| | DATA SHEET FOR CONTROL VALVES (WITH PNEUMATIC ACTUATOR) | SPECIFICATION NO.: PE-TS-381-145-I004 | |
|---|---|---|---|
| | | VOLUME II-B | |
| | | SECTION D | |
| | | REV. NO. 00 | DATE : 14/03/2013 |
| | | SHEET 21 OF 62 | |

Tag No. :…DRV-53… Qty.: …1 per Unit… Date Sheet No. PES-145-06-DS1-0
KKS Tag:...LCH50AA101

## DATA SHEET – A & B

| DATA SHEET – A FOR CONTROL VALVE (WITH PNEUMATIC ACTUATOR) (TO BE FILLED BY PURCHASER) | | | DATA SHEET – B (TO BE FILLED UP BY BIDDER) |
|---|---|---|---|
| PERFORMANCE OF VALVE | LINEARITY<br>HYSTERISIS<br>SENSITIVITY<br>ACCURACY (OVERALL) | ± 2%<br>± 1%<br>± 0.5%<br>± 2% | ……<br>……<br>……<br>…… |

| | SL. No. + | LOAD | FLOW (T/HR) | INLET PR. KG/CM$^2$(A) | OUTLET PR. KG/CM$^2$(A) | TEMP DEG (C) | CALC ULATED CV | % VLV LIFT | VLV O/L VELOCITY |
|---|---|---|---|---|---|---|---|---|---|
| SERVICE CONDITION | 1. | 40% MCR | 20.1 | 27.7 | 16.9 | 207.2 | | | |
| | 2. | 60% MCR | 29.3 | 40.2 | 26.1 | 229.6 | | | |
| | 3. | 100% MCR | 62.0 | 62.9 | 40.8 | 255.1 | | | |
| | 4. | VWO | 66.8 | 65.6 | 42.6 | 257.7 | | | |
| | 5. | BMCR / VWO | 68.6 | 65.1 | 42.2 | 257 | | | |
| | VALVE TYPE | | | | | | [] CAVITATION [■] FLASHING<br>[] HIGH DP | | |
| | * MAX SHUT OFF PRESS ( KG/CM$^2$g) 75<br>* BODY DESIGN : PRESS (KG/CM$^2$g) \| TEMP (DEG C) 75 \| 270<br>* IBR FORM III-C [] REQUIRED [■] NOT REQUIRED | | | | | | ……<br>……\|……<br>…… | | |
| | TOTAL WEIGHT (VALVE + ACTUATOR + ACCESSORIES) Kg | | | | | | …… | | |

NOTES:

1. + DESIGN CV SHALL BE BASED ON SERVICE CONDITIONS INDICATED AT SL. NO. ___4____ AND SHALL BE CHECKED FOR ALL OTHER CONDITIONS.

| | DATA SHEET FOR CONTROL VALVES (WITH PNEUMATIC ACTUATOR) | SPECIFICATION NO.: PE-TS-381-145-I004 | |
|---|---|---|---|
| | | VOLUME II-B | |
| | | SECTION D | |
| | | REV. NO. 00 | DATE : 14/03/2013 |
| | | SHEET 22 OF 62 | |

Tag No. :…DRV-59… Qty.: …1 per Unit… Date Sheet No. PES-145-06-DS1-0
KKS Tag:...LCH60AA101

## DATA SHEET – A & B

| DATA SHEET – A FOR CONTROL VALVE (WITH PNEUMATIC ACTUATOR) (TO BE FILLED BY PURCHASER) | | | DATA SHEET – B (TO BE FILLED UP BY BIDDER) |
|---|---|---|---|
| GENERAL | PROJECT | **SCCL–2x600 MW SINGARENI TPP** | …… |
| | SERVICE | HPH-7B NORMAL DRAIN TO HPH-6B | …… |
| | LOCATION | [■] INDOOR [] OUTDOOR | …… |
| | DUTY | [] ON/OFF [■] MODULATING | …… |
| | PIPE SIZE (inlet / outlet) | 168.3 x 10.97 \| 168.3 x 10.97 | …… |
| | PIPE MATERIAL (inlet / outlet) | SA 106 GR B \| SA 106 GR B | ……\|…… |
| BODY | MODEL NO. | Bidder to Specify | …… |
| | TYPE OF BODY: GUIDING : NO. OF PORTS | [■] GLOBE [] ANGLE \| [] TOP [■] CAGE \| ONE | ……\|……\|……\|…… |
| | BODY SIZE: PORT SIZE: DESIGN CV | Bidder to Specify | ……\|……\|…… |
| | END CONNECTION & RATING (ANSI) | [■] BWE [] SWE [] FLANGED | …… |
| | BODY MATERIAL | [] A216 WCB [■] A217 WC6 [] SS [] A217 CS [] A351 CF8M | …… |
| | PACKING: MATERIAL SINGLE / DOUBLE | [] PTFE [■] GRAFOIL [] DOUBLE [■] SINGLE | …… |
| | BONNET TYPE | [] STD [] EXTENDED [] FINNED | …… |
| | TRIM FORM | [■] LINEAR [] EQ. PERCENTAGE [] QUICK OPEN (ON/OFF) | ……\|…… |
| | TRIM MATERIAL: SEAT \| PLUG | 17-4 PH SS \| 17-4 PH SS | ……\|…… |
| | : CAGE \| GUIDE BUSH | 17-4 PH SS \| 17-4 PH SS | …… |
| | FLOW | [] BELOW SEAT [] ABOVE SEAT | …… |
| | OUTLET VELOCITY | [■] < 7 M/SEC (WATER) \| [] MAC NO. < 1/3(STM) | ……\|…… |
| | REQUIRED LEAKAGE CLASS | [] II [] III [■] IV [] V [] VI | …… |
| | NOISE LEVEL (dBA) (spec. 3.1.14) | LESS THAN 85 dBA | …… |
| | VACUUM SERVICE | [] YES [■] NO | …… |
| | ANTI CAVITATION TRIM | [] YES [■] NO | …… |
| PNEUMATIC ACTUATOR | MODEL NO. & SIZE | Bidder to Specify | ……\|…… |
| | CLOSE AT : OPEN AT (KG/CM$^2$g) | 0.2 \| 1 | ……\|…… |
| | TRAVEL TIME FOR OPEN TO CLOSE, CLOSE TO OPEN | < 10 SEC \| | …… |
| | VALVE POSN. ON SIGNAL AIR FAILURE | [] TO OPEN [] STAYPUT [■] TO CLOSE | …… |
| | VALVE POSN. ON SUPPLY AIR FAILURE | [■] STAYPUT | …… |
| ACCESSORIES | POSITIONER (SMART ELECTRO PNEUMATIC) | [■] REQUIRED [] NOT REQUIRED | …… |
| | AIR FILTER REGULATOR | [■] REQUIRED [] NOT REQUIRED | …… |
| | AIR LOCK RELAY | [■] REQUIRED [] NOT REQUIRED | …… |
| | POSITION LIMIT SWITCH | [■] REQUIRED [] NOT REQUIRED | …… |
| | POSITION TRANSMITTER | PART OF POSITIONER | …… |
| | SOLENOID VALVE | [■] REQUIRED [] NOT REQUIRED | …… |
| | E/P CONVERTER | PART OF POSITIONER | …… |
| | JUNCTION BOX | [■] REQUIRED [] NOT REQUIRED | …… |
| | HAND WHEEL (SIDE MOUNTED) | [■] REQUIRED | …… |
| | LOCAL POSITION INDICATOR | [■] REQUIRED | …… |

| | DATA SHEET FOR CONTROL VALVES (WITH PNEUMATIC ACTUATOR) | SPECIFICATION NO.: PE-TS-381-145-I004 | |
|---|---|---|---|
| | | VOLUME II-B | |
| | | SECTION D | |
| | | REV. NO. 00 | DATE : 14/03/2013 |
| | | SHEET 23 OF 62 | |

Tag No. :…DRV-59… Qty.: …1 per Unit… Date Sheet No. PES-145-06-DS1-0
KKS Tag:...LCH60AA101

## DATA SHEET – A & B

| DATA SHEET – A FOR CONTROL VALVE (WITH PNEUMATIC ACTUATOR) (TO BE FILLED BY PURCHASER) | | | DATA SHEET – B (TO BE FILLED UP BY BIDDER) |
|---|---|---|---|
| PERFORMANCE OF VALVE | LINEARITY | ± 2% | …… |
| | HYSTERISIS | ± 1% | …… |
| | SENSITIVITY | ± 0.5% | …… |
| | ACCURACY (OVERALL) | ± 2% | …… |

SERVICE CONDITION

| SL. No. + | LOAD | FLOW (T/HR) | INLET PR. KG/CM$^2$(A) | OUTLET PR. KG/CM$^2$(A) | TEMP DEG (C) | CALC ULATED CV | % VLV LIFT | VLV O/L VELOCITY |
|---|---|---|---|---|---|---|---|---|
| 1. | 40% MCR | 20.1 | 27.7 | 16.9 | 207.2 | | | |
| 2. | 60% MCR | 29.3 | 40.2 | 26.1 | 229.6 | | | |
| 3. | 100% MCR | 62.0 | 62.9 | 40.8 | 255.1 | | | |
| 4. | VWO | 66.8 | 65.6 | 42.6 | 257.7 | | | |
| 5. | BMCR / VWO | 68.6 | 65.1 | 42.2 | 257 | | | |

| | |
|---|---|
| VALVE TYPE | [] CAVITATION [■] FLASHING<br>[] HIGH DP |
| * MAX SHUT OFF PRESS ( KG/CM$^2$g) 75<br>* BODY DESIGN : PRESS (KG/CM$^2$g) \| TEMP (DEG C) 75 \| 270<br>* IBR FORM III-C [] REQUIRED [■] NOT REQUIRED | ……<br>……\|……<br>…… |
| TOTAL WEIGHT (VALVE + ACTUATOR + ACCESSORIES) Kg | …… |

NOTES:

1. + DESIGN CV SHALL BE BASED ON SERVICE CONDITIONS INDICATED AT SL. NO. ___4____ AND SHALL BE CHECKED FOR ALL OTHER CONDITIONS.

| | DATA SHEET FOR CONTROL VALVES (WITH PNEUMATIC ACTUATOR) | SPECIFICATION NO.: PE-TS-381-145-I004 | |
|---|---|---|---|
| | | VOLUME II-B | |
| | | SECTION D | |
| | | REV. NO. 00 | DATE : 14/03/2013 |
| | | SHEET 24 OF 62 | |

Tag No. :…DRV-56… Qty.: …1 per Unit… Date Sheet No. PES-145-06-DS1-0
KKS Tag:...LCH55AA101

## DATA SHEET – A & B

| DATA SHEET – A FOR CONTROL VALVE (WITH PNEUMATIC ACTUATOR) (TO BE FILLED BY PURCHASER) | | | DATA SHEET – B (TO BE FILLED UP BY BIDDER) |
|---|---|---|---|
| GENERAL | PROJECT | **SCCL–2x600 MW SINGARENI TPP** | …… |
| | SERVICE | HPH-7A ALT. DRAIN TO F/T-A | …… |
| | LOCATION | [■] INDOOR [] OUTDOOR | …… |
| | DUTY | [] ON/OFF [■] MODULATING | …… |
| | PIPE SIZE (inlet / outlet) | 168.3 x 10.97 \| 219.1 x 12.7 | …… |
| | PIPE MATERIAL (inlet / outlet) | SA 106 GR B \| SA 106 GR B | ……\|…… |
| BODY | MODEL NO. | Bidder to Specify | …… |
| | TYPE OF BODY: GUIDING : NO. OF PORTS | [■] GLOBE [] ANGLE \| [] TOP [■] CAGE \| ONE | ……\|……\|……\|…… |
| | BODY SIZE: PORT SIZE: DESIGN CV | Bidder to Specify | ……\|……\|…… |
| | END CONNECTION & RATING (ANSI) | [■] BWE [] SWE [] FLANGED | …… |
| | BODY MATERIAL | [] A216 WCB [■] A217 WC9 [] SS [] A217 CS [] A351 CF8M | …… |
| | PACKING: MATERIAL SINGLE / DOUBLE | [] PTFE [■] GRAFOIL [■] DOUBLE [] SINGLE | …… |
| | BONNET TYPE | [] STD [] EXTENDED [] FINNED | …… |
| | TRIM FORM | [■] LINEAR [] EQ. PERCENTAGE | ……\|…… |
| | | [] QUICK OPEN (ON/OFF) | ……\|…… |
| | TRIM MATERIAL: SEAT \| PLUG | 440C \| 440C | …… |
| | : CAGE \| GUIDE BUSH | 440C \| 440C | …… |
| | FLOW | [] BELOW SEAT [] ABOVE SEAT | ……\|…… |
| | OUTLET VELOCITY | [■] < 7 M/SEC (WATER) \| [] MAC NO. < 1/3(STM) | …… |
| | REQUIRED LEAKAGE CLASS | [] II [] III [] IV [■] V [] VI | …… |
| | NOISE LEVEL (dBA) (spec. 3.1.14) | LESS THAN 85 dBA | …… |
| | VACUUM SERVICE | [■] YES [] NO | …… |
| | ANTI CAVITATION TRIM | [■] YES [] NO | …… |
| PNEUMATIC ACTUATOR | MODEL NO. & SIZE | Bidder to Specify | ……\|…… |
| | CLOSE AT : OPEN AT ($KG/CM^2g$) | 1 \| 0.2 | ……\|…… |
| | TRAVEL TIME FOR OPEN TO CLOSE, CLOSE TO OPEN | < 10 SEC \| | …… |
| | VALVE POSN. ON SIGNAL AIR FAILURE | [■] TO OPEN [] STAYPUT [] TO CLOSE | …… |
| | VALVE POSN. ON SUPPLY AIR FAILURE | [■] STAYPUT | …… |
| ACCESSORIES | POSITIONER (SMART ELECTRO PNEUMATIC) | [■] REQUIRED [] NOT REQUIRED | …… |
| | AIR FILTER REGULATOR | [■] REQUIRED [] NOT REQUIRED | …… |
| | AIR LOCK RELAY | [■] REQUIRED [] NOT REQUIRED | …… |
| | POSITION LIMIT SWITCH | [■] REQUIRED [] NOT REQUIRED | …… |
| | POSITION TRANSMITTER | PART OF POSITIONER | …… |
| | SOLENOID VALVE | [■] REQUIRED [] NOT REQUIRED | …… |
| | E/P CONVERTER | PART OF POSITIONER | …… |
| | JUNCTION BOX | [■] REQUIRED [] NOT REQUIRED | …… |
| | HAND WHEEL (SIDE MOUNTED) | [■] REQUIRED | …… |
| | LOCAL POSITION INDICATOR | [■] REQUIRED | …… |

| | DATA SHEET FOR CONTROL VALVES (WITH PNEUMATIC ACTUATOR) | SPECIFICATION NO.: PE-TS-381-145-I004 | |
|---|---|---|---|
| | | VOLUME II-B | |
| | | SECTION D | |
| | | REV. NO. 00 | DATE : 14/03/2013 |
| | | SHEET 25 OF 62 | |

Tag No. :…DRV-56… Qty.: …1 per Unit… Date Sheet No. PES-145-06-DS1-0
KKS Tag:...LCH55AA101

## DATA SHEET – A & B

| DATA SHEET – A FOR CONTROL VALVE (WITH PNEUMATIC ACTUATOR) (TO BE FILLED BY PURCHASER) | | | DATA SHEET – B (TO BE FILLED UP BY BIDDER) |
|---|---|---|---|
| PERFORMANCE OF VALVE | LINEARITY | ± 2% | …… |
| | HYSTERISIS | ± 1% | …… |
| | SENSITIVITY | ± 0.5% | …… |
| | ACCURACY (OVERALL) | ± 2% | …… |

| | SL. No. + | LOAD | FLOW (T/HR) | INLET PR. $KG/CM^2(A)$ | OUTLET PR. $KG/CM^2(A)$ | TEMP DEG (C) | CALC ULATED CV | % VLV LIFT | VLV O/L VELOCITY |
|---|---|---|---|---|---|---|---|---|---|
| SERVICE CONDITION | 1. | 40% MCR | 20.1 | 28.0 | 0.3 | 227 | | | |
| | 2. | 60% MCR | 29.3 | 41 | 0.3 | 248.6 | | | |
| | 3. | 100% MCR | 62.0 | 63.3 | 0.3 | 276.9 | | | |
| | 4. | VWO | 66.8 | 66 | 0.3 | 279.8 | | | |
| | 5. | BMCR / VWO | 68.6 | 65.0 | 0.5 | 279.3 | | | |

| | | |
|---|---|---|
| | VALVE TYPE | [] CAVITATION [■] FLASHING [■] HIGH DP |
| | * MAX SHUT OFF PRESS ( $KG/CM^2g$) 75<br>* BODY DESIGN : PRESS ($KG/CM^2g$) \| TEMP (DEG C) 75/VACUUM \| 290<br>* IBR FORM III-C [] REQUIRED [■] NOT REQUIRED | ……<br>……\|……<br>…… |
| | TOTAL WEIGHT (VALVE + ACTUATOR + ACCESSORIES) Kg | …… |

NOTES:

1. + DESIGN CV SHALL BE BASED ON SERVICE CONDITIONS INDICATED AT SL. NO. ___4____ AND SHALL BE CHECKED FOR ALL OTHER CONDITIONS.

Tag No. :…DRV-62… Qty.: …1 per Unit… Date Sheet No. PES-145-06-DS1-0
KKS Tag:...LCH65AA101

## DATA SHEET – A & B

| DATA SHEET – A FOR CONTROL VALVE (WITH PNEUMATIC ACTUATOR) (TO BE FILLED BY PURCHASER) | | | DATA SHEET – B (TO BE FILLED UP BY BIDDER) |
|---|---|---|---|
| GENERAL | PROJECT | **SCCL–2x600 MW SINGARENI TPP** | …… |
| | SERVICE | HPH-7B ALT. DRAIN TO F/T-B | …… |
| | LOCATION | [■] INDOOR [] OUTDOOR | …… |
| | DUTY | [] ON/OFF [■] MODULATING | …… |
| | PIPE SIZE (inlet / outlet) | 168.3 x 10.97 \| 219.1 x 12.7 | …… |
| | PIPE MATERIAL (inlet / outlet) | SA 106 GR B \| SA 106 GR B | ……\|…… |
| BODY | MODEL NO. | Bidder to Specify | …… |
| | TYPE OF BODY: GUIDING : NO. OF PORTS | [■] GLOBE [] ANGLE \| [] TOP [■] CAGE \| ONE | ……\|……\|……\|…… |
| | BODY SIZE: PORT SIZE: DESIGN CV | Bidder to Specify | ……\|……\|…… |
| | END CONNECTION & RATING (ANSI) | [■] BWE [] SWE [] FLANGED | …… |
| | BODY MATERIAL | [] A216 WCB [■] A217 WC9 [] SS [] A217 CS [] A351 CF8M | …… |
| | PACKING: MATERIAL SINGLE / DOUBLE | [] PTFE [■] GRAFOIL [■] DOUBLE [] SINGLE | …… |
| | BONNET TYPE | [] STD [] EXTENDED [] FINNED | …… |
| | TRIM FORM | [■] LINEAR [] EQ. PERCENTAGE | ……\|…… |
| | TRIM MATERIAL: SEAT \| PLUG | [] QUICK OPEN (ON/OFF) | ……\|…… |
| | : CAGE \| GUIDE BUSH | 440C \| 440C | …… |
| | FLOW | 440C \| 440C | …… |
| | OUTLET VELOCITY | [] BELOW SEAT [] ABOVE SEAT | ……\|…… |
| | | [■] < 7 M/SEC (WATER) \| [] MAC NO. < 1/3(STM) | …… |
| | REQUIRED LEAKAGE CLASS | [] II [] III [] IV [■] V [] VI | …… |
| | NOISE LEVEL (dBA) (spec. 3.1.14) | LESS THAN 85 dBA | …… |
| | VACUUM SERVICE | [■] YES [] NO | …… |
| | ANTI CAVITATION TRIM | [■] YES [] NO | …… |
| PNEUMATIC ACTUATOR | MODEL NO. & SIZE | Bidder to Specify | ……\|…… |
| | CLOSE AT : OPEN AT ($KG/CM^2g$) | 1 \| 0.2 | ……\|…… |
| | TRAVEL TIME FOR OPEN TO CLOSE, CLOSE TO OPEN | < 10 SEC \| | …… |
| | VALVE POSN. ON SIGNAL AIR FAILURE | [■] TO OPEN [] STAYPUT [] TO CLOSE | …… |
| | VALVE POSN. ON SUPPLY AIR FAILURE | [■] STAYPUT | …… |
| ACCESSORIES | POSITIONER (SMART ELECTRO PNEUMATIC) | [■] REQUIRED [] NOT REQUIRED | …… |
| | AIR FILTER REGULATOR | [■] REQUIRED [] NOT REQUIRED | …… |
| | AIR LOCK RELAY | [■] REQUIRED [] NOT REQUIRED | …… |
| | POSITION LIMIT SWITCH | [■] REQUIRED [] NOT REQUIRED | …… |
| | POSITION TRANSMITTER | PART OF POSITIONER | …… |
| | SOLENOID VALVE | [■] REQUIRED [] NOT REQUIRED | …… |
| | E/P CONVERTER | PART OF POSITIONER | …… |
| | JUNCTION BOX | [■] REQUIRED [] NOT REQUIRED | …… |
| | HAND WHEEL (SIDE MOUNTED) | [■] REQUIRED | …… |
| | LOCAL POSITION INDICATOR | [■] REQUIRED | …… |

| | DATA SHEET FOR CONTROL VALVES (WITH PNEUMATIC ACTUATOR) | SPECIFICATION NO.: PE-TS-381-145-I004 | |
|---|---|---|---|
| | | VOLUME II-B | |
| | | SECTION D | |
| | | REV. NO. 00 | DATE : 14/03/2013 |
| | | SHEET 27 OF 62 | |

Tag No. :…DRV-62… Qty.: …1 per Unit… Date Sheet No. PES-145-06-DS1-0
KKS Tag:...LCH65AA101

## DATA SHEET – A & B

| DATA SHEET – A FOR CONTROL VALVE (WITH PNEUMATIC ACTUATOR) (TO BE FILLED BY PURCHASER) | | | DATA SHEET – B (TO BE FILLED UP BY BIDDER) |
|---|---|---|---|
| PERFORMANCE OF VALVE | LINEARITY | ± 2% | ..... |
| | HYSTERISIS | ± 1% | ..... |
| | SENSITIVITY | ± 0.5% | ..... |
| | ACCURACY (OVERALL) | ± 2% | ..... |

| | SL. No. + | LOAD | FLOW (T/HR) | INLET PR. $KG/CM^2(A)$ | OUTLET PR. $KG/CM^2(A)$ | TEMP DEG (C) | CALC ULATED CV | % VLV LIFT | VLV O/L VELOCITY |
|---|---|---|---|---|---|---|---|---|---|
| SERVICE CONDITION | 1. | 40% MCR | 20.1 | 28.0 | 0.3 | 227 | | | |
| | 2. | 60% MCR | 29.3 | 41 | 0.3 | 248.6 | | | |
| | 3. | 100% MCR | 62.0 | 63.3 | 0.3 | 276.9 | | | |
| | 4. | VWO | 66.8 | 66 | 0.3 | 279.8 | | | |
| | 5. | BMCR / VWO | 68.6 | 65.0 | 0.5 | 279.3 | | | |
| | VALVE TYPE | | | | | | [] CAVITATION [■] FLASHING [■] HIGH DP | | |
| | * MAX SHUT OFF PRESS ( $KG/CM^2g$) 75<br>* BODY DESIGN : PRESS ($KG/CM^2g$) \| TEMP (DEG C) 75/VACUUM \| 290<br>* IBR FORM III-C [] REQUIRED [■] NOT REQUIRED | | | | | | ……<br>……\|……<br>…… | | |
| | TOTAL WEIGHT (VALVE + ACTUATOR + ACCESSORIES) Kg | | | | | | …… | | |

NOTES:

1. + DESIGN CV SHALL BE BASED ON SERVICE CONDITIONS INDICATED AT SL. NO. ___4____ AND SHALL BE CHECKED FOR ALL OTHER CONDITIONS.

Tag No. :…DRV-2… Qty.: …1 per Unit… Date Sheet No. PES-145-06-DS1-0
KKS Tag:...LCH30AA101

## DATA SHEET – A & B

| DATA SHEET – A FOR CONTROL VALVE (WITH PNEUMATIC ACTUATOR) (TO BE FILLED BY PURCHASER) | | | DATA SHEET – B (TO BE FILLED UP BY BIDDER) |
|---|---|---|---|
| GENERAL | PROJECT | **SCCL–2x600 MW SINGARENI TPP** | …… |
| | SERVICE | HPH-6A NORMAL DRAIN TO HPH-5A | …… |
| | LOCATION | [■] INDOOR [] OUTDOOR | …… |
| | DUTY | [] ON/OFF [■] MODULATING | …… |
| | PIPE SIZE (inlet / outlet) | 219.1 x 8.18 \| 219.1 x 8.18 | …… |
| | PIPE MATERIAL (inlet / outlet) | SA 106 GR C \| SA 106 GR C | ……\|…… |
| BODY | MODEL NO. | Bidder to Specify | …… |
| | TYPE OF BODY: GUIDING : NO. OF PORTS | [■] GLOBE [] ANGLE \| [] TOP [■] CAGE \| ONE | ……\|……\|……\|…… |
| | BODY SIZE: PORT SIZE: DESIGN CV | Bidder to Specify | ……\|……\|…… |
| | END CONNECTION & RATING (ANSI) | [■] BWE [] SWE [] FLANGED | …… |
| | BODY MATERIAL | [] A216 WCB [■] A217 WC6 [] SS [] A217 CS [] A351 CF8M | …… |
| | PACKING: MATERIAL SINGLE / DOUBLE | [] PTFE [■] GRAFOIL [] DOUBLE [■] SINGLE | …… |
| | BONNET TYPE | [] STD [] EXTENDED [] FINNED | …… |
| | TRIM FORM | [■] LINEAR [] EQ. PERCENTAGE | …… |
| | | [] QUICK OPEN (ON/OFF) | ……\|…… |
| | TRIM MATERIAL: SEAT \| PLUG | 440C \| 440C | ……\|…… |
| | : CAGE \| GUIDE BUSH | 440C \| 440C | …… |
| | FLOW | [] BELOW SEAT [] ABOVE SEAT | …… |
| | OUTLET VELOCITY | [■] < 7 M/SEC (WATER) \| [] MAC NO. < 1/3(STM) | ……\|…… |
| | REQUIRED LEAKAGE CLASS | [] II [] III [■] IV [] V [] VI | …… |
| | NOISE LEVEL (dBA) (spec. 3.1.14) | LESS THAN 85 dBA | …… |
| | VACUUM SERVICE | [] YES [■] NO | …… |
| | ANTI CAVITATION TRIM | [] YES [■] NO | …… |
| PNEUMATIC ACTUATOR | MODEL NO. & SIZE | Bidder to Specify | ……\|…… |
| | CLOSE AT : OPEN AT ($KG/CM^2g$) | 0.2 \| 1 | ……\|…… |
| | TRAVEL TIME FOR | < 10 SEC | …… |
| | OPEN TO CLOSE, CLOSE TO OPEN | \| | …… |
| | VALVE POSN. ON SIGNAL AIR FAILURE | [] TO OPEN [] STAYPUT [■] TO CLOSE | …… |
| | VALVE POSN. ON SUPPLY AIR FAILURE | [■] STAYPUT | …… |
| ACCESSORIES | POSITIONER (SMART ELECTRO PNEUMATIC) | [■] REQUIRED [] NOT REQUIRED | …… |
| | AIR FILTER REGULATOR | [■] REQUIRED [] NOT REQUIRED | …… |
| | AIR LOCK RELAY | [■] REQUIRED [] NOT REQUIRED | …… |
| | POSITION LIMIT SWITCH | [■] REQUIRED [] NOT REQUIRED | …… |
| | POSITION TRANSMITTER | PART OF POSITIONER | …… |
| | SOLENOID VALVE | [■] REQUIRED [] NOT REQUIRED | …… |
| | E/P CONVERTER | PART OF POSITIONER | …… |
| | JUNCTION BOX | [■] REQUIRED [] NOT REQUIRED | …… |
| | HAND WHEEL (SIDE MOUNTED) | [■] REQUIRED | …… |
| | LOCAL POSITION INDICATOR | [■] REQUIRED | …… |

| | DATA SHEET FOR CONTROL VALVES (WITH PNEUMATIC ACTUATOR) | SPECIFICATION NO.: PE-TS-381-145-I004 | |
|---|---|---|---|
| | | VOLUME II-B | |
| | | SECTION D | |
| | | REV. NO. 00 | DATE : 14/03/2013 |
| | | SHEET 29 OF 62 | |

Tag No. :…DRV-2… Qty.: …1 per Unit… Date Sheet No. PES-145-06-DS1-0
KKS Tag:...LCH30AA101

## DATA SHEET – A & B

| DATA SHEET – A FOR CONTROL VALVE (WITH PNEUMATIC ACTUATOR) (TO BE FILLED BY PURCHASER) | | | DATA SHEET – B (TO BE FILLED UP BY BIDDER) |
|---|---|---|---|
| PERFORMANCE OF VALVE | LINEARITY | ± 2% | …… |
| | HYSTERISIS | ± 1% | …… |
| | SENSITIVITY | ± 0.5% | …… |
| | ACCURACY (OVERALL) | ± 2% | …… |

| | SL. No. + | LOAD | FLOW (T/HR) | INLET PR. $KG/CM^2(A)$ | OUTLET PR. $KG/CM^2(A)$ | TEMP DEG (C) | CALC ULATED CV | % VLV LIFT | VLV O/L VELOCITY |
|---|---|---|---|---|---|---|---|---|---|
| SERVICE CONDITION | 1. | 40% MCR | 43.8 | 16.5 | 8.1 | 174.2 | | | |
| | 2. | 60% MCR | 70.5 | 25.8 | 11.9 | 191.3 | | | |
| | 3. | 100% MCR | 143.8 | 40.2 | 18.5 | 211.7 | | | |
| | 4. | VWO | 154.2 | 42.0 | 19.3 | 213.8 | | | |
| | 5. | BMCR / VWO | 158.5 | 41.4 | 18.9 | 212.9 | | | |

| | | |
|---|---|---|
| VALVE TYPE | | [] CAVITATION [■] FLASHING<br>[] HIGH DP |
| * MAX SHUT OFF PRESS ( $KG/CM^2g$)<br>* BODY DESIGN : PRESS ($KG/CM^2g$) \| TEMP (DEG C)<br>* IBR FORM III-C | 54<br>54 \| 220<br>[] REQUIRED [■] NOT REQUIRED | ……<br>……\|……<br>…… |
| TOTAL WEIGHT (VALVE + ACTUATOR + ACCESSORIES) Kg | | …… |

NOTES:

1. + DESIGN CV SHALL BE BASED ON SERVICE CONDITIONS INDICATED AT SL. NO. ___4____ AND SHALL BE CHECKED FOR ALL OTHER CONDITIONS.

| | DATA SHEET FOR CONTROL VALVES (WITH PNEUMATIC ACTUATOR) | SPECIFICATION NO.: PE-TS-381-145-I004 | |
|---|---|---|---|
| | | VOLUME II-B | |
| | | SECTION D | |
| | | REV. NO. 00 | DATE : 14/03/2013 |
| | | SHEET 30 OF 62 | |

Tag No. :…DRV-8… Qty.: …1 per Unit… Date Sheet No. PES-145-06-DS1-0
KKS Tag:...LCH40AA101

## DATA SHEET – A & B

| DATA SHEET – A FOR CONTROL VALVE (WITH PNEUMATIC ACTUATOR) (TO BE FILLED BY PURCHASER) | | | DATA SHEET – B (TO BE FILLED UP BY BIDDER) |
|---|---|---|---|
| GENERAL | PROJECT | **SCCL–2x600 MW SINGARENI TPP** | …… |
| | SERVICE | HPH-6B NORMAL DRAIN TO HPH-5B | …… |
| | LOCATION | [■] INDOOR [] OUTDOOR | …… |
| | DUTY | [] ON/OFF [■] MODULATING | …… |
| | PIPE SIZE (inlet / outlet) | 219.1 x 8.18 \| 219.1 x 8.18 | …… |
| | PIPE MATERIAL (inlet / outlet) | SA 106 GR C \| SA 106 GR C | ……\|…… |
| BODY | MODEL NO. | Bidder to Specify | …… |
| | TYPE OF BODY: GUIDING : NO. OF PORTS | [■] GLOBE [] ANGLE \| [] TOP [■] CAGE \| ONE | ……\|……\|……\|…… |
| | BODY SIZE: PORT SIZE: DESIGN CV | Bidder to Specify | ……\|……\|…… |
| | END CONNECTION & RATING (ANSI) | [■] BWE [] SWE [] FLANGED | …… |
| | BODY MATERIAL | [] A216 WCB [■] A217 WC6 [] SS [] A217 CS [] A351 CF8M | …… |
| | PACKING: MATERIAL SINGLE / DOUBLE | [] PTFE [■] GRAFOIL [] DOUBLE [■] SINGLE | …… |
| | BONNET TYPE | [] STD [] EXTENDED [] FINNED | …… |
| | TRIM FORM | [■] LINEAR [] EQ. PERCENTAGE | ……\|…… |
| | TRIM MATERIAL: SEAT \| PLUG | [] QUICK OPEN (ON/OFF) | ……\|…… |
| | : CAGE \| GUIDE BUSH | 17-4 PH SS \| 17-4 PH SS | …… |
| | FLOW | 17-4 PH SS \| 17-4 PH SS | …… |
| | OUTLET VELOCITY | [] BELOW SEAT [] ABOVE SEAT | ……\|…… |
| | REQUIRED LEAKAGE CLASS | [■] < 7 M/SEC (WATER) \| [] MAC NO. < 1/3(STM) | …… |
| | NOISE LEVEL (dBA) (spec. 3.1.14) | [] II [] III [■] IV [] V [] VI | …… |
| | VACUUM SERVICE | LESS THAN 85 dBA | …… |
| | ANTI CAVITATION TRIM | [] YES [■] NO | …… |
| | | [] YES [■] NO | |
| PNEUMATIC ACTUATOR | MODEL NO. & SIZE | Bidder to Specify | ……\|…… |
| | CLOSE AT : OPEN AT ($KG/CM^2g$) | 0.2 \| 1 | ……\|…… |
| | TRAVEL TIME FOR | < 10 SEC | …… |
| | OPEN TO CLOSE, CLOSE TO OPEN | \| | …… |
| | VALVE POSN. ON SIGNAL AIR FAILURE | [] TO OPEN [] STAYPUT [■] TO CLOSE | …… |
| | VALVE POSN. ON SUPPLY AIR FAILURE | [■] STAYPUT | …… |
| ACCESSORIES | POSITIONER (SMART ELECTRO PNEUMATIC) | [■] REQUIRED [] NOT REQUIRED | …… |
| | AIR FILTER REGULATOR | [■] REQUIRED [] NOT REQUIRED | …… |
| | AIR LOCK RELAY | [■] REQUIRED [] NOT REQUIRED | …… |
| | POSITION LIMIT SWITCH | [■] REQUIRED [] NOT REQUIRED | …… |
| | POSITION TRANSMITTER | PART OF POSITIONER | …… |
| | SOLENOID VALVE | [■] REQUIRED [] NOT REQUIRED | …… |
| | E/P CONVERTER | PART OF POSITIONER | …… |
| | JUNCTION BOX | [■] REQUIRED [] NOT REQUIRED | …… |
| | HAND WHEEL (SIDE MOUNTED) | [■] REQUIRED | …… |
| | LOCAL POSITION INDICATOR | [■] REQUIRED | …… |

Tag No. :…DRV-8… Qty.: …1 per Unit… Date Sheet No. PES-145-06-DS1-0
KKS Tag:...LCH40AA101

## DATA SHEET – A & B

| DATA SHEET – A FOR CONTROL VALVE (WITH PNEUMATIC ACTUATOR) (TO BE FILLED BY PURCHASER) | | | DATA SHEET – B (TO BE FILLED UP BY BIDDER) |
|---|---|---|---|
| PERFORMANCE OF VALVE | LINEARITY | ± 2% | …… |
| | HYSTERISIS | ± 1% | …… |
| | SENSITIVITY | ± 0.5% | …… |
| | ACCURACY (OVERALL) | ± 2% | …… |

SERVICE CONDITION

| SL. No. + | LOAD | FLOW (T/HR) | INLET PR. $KG/CM^2(A)$ | OUTLET PR. $KG/CM^2(A)$ | TEMP DEG (C) | CALC ULATED CV | % VLV LIFT | VLV O/L VELOCITY |
|---|---|---|---|---|---|---|---|---|
| 1. | 40% MCR | 43.8 | 16.5 | 8.1 | 174.2 | | | |
| 2. | 60% MCR | 70.5 | 25.8 | 11.9 | 191.3 | | | |
| 3. | 100% MCR | 143.8 | 40.2 | 18.5 | 211.7 | | | |
| 4. | VWO | 154.2 | 42.0 | 19.3 | 213.8 | | | |
| 5. | BMCR / VWO | 158.5 | 41.4 | 18.9 | 212.9 | | | |

| | |
|---|---|
| VALVE TYPE | [] CAVITATION [■] FLASHING<br>[] HIGH DP |
| * MAX SHUT OFF PRESS ( $KG/CM^2g$) 54<br>* BODY DESIGN : PRESS ($KG/CM^2g$) \| TEMP (DEG C) 54 \| 220<br>* IBR FORM III-C [] REQUIRED [■] NOT REQUIRED | ……<br>……\|……<br>…… |
| TOTAL WEIGHT (VALVE + ACTUATOR + ACCESSORIES) Kg | …… |

NOTES:

1. + DESIGN CV SHALL BE BASED ON SERVICE CONDITIONS INDICATED AT SL. NO. ___4____ AND SHALL BE CHECKED FOR ALL OTHER CONDITIONS.

Tag No. :…DRV-5… Qty.: …1 per Unit… Date Sheet No. PES-145-06-DS1-0
KKS Tag:...LCH35AA101

## DATA SHEET – A & B

| DATA SHEET – A FOR CONTROL VALVE (WITH PNEUMATIC ACTUATOR) (TO BE FILLED BY PURCHASER) | | | DATA SHEET – B (TO BE FILLED UP BY BIDDER) |
|---|---|---|---|
| GENERAL | PROJECT | **SCCL–2x600 MW SINGARENI TPP** | …… |
| | SERVICE | HPH-6A ALT. DRAIN TO F/T-B | …… |
| | LOCATION | [■] INDOOR [] OUTDOOR | …… |
| | DUTY | [] ON/OFF [■] MODULATING | …… |
| | PIPE SIZE (inlet / outlet) | 219.1 x 8.18 \| 273 x 9.27 | …… |
| | PIPE MATERIAL (inlet / outlet) | SA 106 GR C \| SA 106 GR C | ……\|…… |
| BODY | MODEL NO. | Bidder to Specify | …… |
| | TYPE OF BODY: GUIDING : NO. OF PORTS | [■] GLOBE [] ANGLE \| [] TOP [■] CAGE \| ONE | ……\|……\|……\|…… |
| | BODY SIZE: PORT SIZE: DESIGN CV | Bidder to Specify | ……\|……\|…… |
| | END CONNECTION & RATING (ANSI) | [■] BWE [] SWE [] FLANGED | …… |
| | BODY MATERIAL | [] A216 WCB [■] A217 WC9 [] SS [] A217 CS [] A351 CF8M | …… |
| | PACKING: MATERIAL SINGLE / DOUBLE | [] PTFE [■] GRAFOIL [■] DOUBLE [] SINGLE | …… |
| | BONNET TYPE | [] STD [] EXTENDED [] FINNED | …… |
| | TRIM FORM | [■] LINEAR [] EQ. PERCENTAGE | ……\|…… |
| | TRIM MATERIAL: SEAT \| PLUG | [] QUICK OPEN (ON/OFF) | ……\|…… |
| | : CAGE \| GUIDE BUSH | 440C \| 440C | …… |
| | FLOW | 440C \| 440C | …… |
| | OUTLET VELOCITY | [] BELOW SEAT [] ABOVE SEAT | ……\|…… |
| | | [■] < 7 M/SEC (WATER) \| [] MAC NO. < 1/3(STM) | …… |
| | REQUIRED LEAKAGE CLASS | [] II [] III [] IV [■] V [] VI | …… |
| | NOISE LEVEL (dBA) (spec. 3.1.14) | LESS THAN 85 dBA | …… |
| | VACUUM SERVICE | [■] YES [] NO | …… |
| | ANTI CAVITATION TRIM | [■] YES [] NO | …… |
| PNEUMATIC ACTUATOR | MODEL NO. & SIZE | Bidder to Specify | ……\|…… |
| | CLOSE AT : OPEN AT ($KG/CM^2g$) | 1 \| 0.2 | ……\|…… |
| | TRAVEL TIME FOR OPEN TO CLOSE, CLOSE TO OPEN | < 10 SEC \| | …… |
| | VALVE POSN. ON SIGNAL AIR FAILURE | [■] TO OPEN [] STAYPUT [] TO CLOSE | …… |
| | VALVE POSN. ON SUPPLY AIR FAILURE | [■] STAYPUT | …… |
| ACCESSORIES | POSITIONER (SMART ELECTRO PNEUMATIC) | [■] REQUIRED [] NOT REQUIRED | …… |
| | AIR FILTER REGULATOR | [■] REQUIRED [] NOT REQUIRED | …… |
| | AIR LOCK RELAY | [■] REQUIRED [] NOT REQUIRED | …… |
| | POSITION LIMIT SWITCH | [■] REQUIRED [] NOT REQUIRED | …… |
| | POSITION TRANSMITTER | PART OF POSITIONER | …… |
| | SOLENOID VALVE | [■] REQUIRED [] NOT REQUIRED | …… |
| | E/P CONVERTER | PART OF POSITIONER | …… |
| | JUNCTION BOX | [■] REQUIRED [] NOT REQUIRED | …… |
| | HAND WHEEL (SIDE MOUNTED) | [■] REQUIRED | …… |
| | LOCAL POSITION INDICATOR | [■] REQUIRED | …… |

| | DATA SHEET FOR CONTROL VALVES (WITH PNEUMATIC ACTUATOR) | SPECIFICATION NO.: PE-TS-381-145-I004 | |
|---|---|---|---|
| | | VOLUME II-B | |
| | | SECTION D | |
| | | REV. NO. 00 | DATE : 14/03/2013 |
| | | SHEET 33 OF 62 | |

Tag No. :…DRV-5… Qty.: …1 per Unit… Date Sheet No. PES-145-06-DS1-0
KKS Tag:...LCH35AA101

## DATA SHEET – A & B

| DATA SHEET – A FOR CONTROL VALVE (WITH PNEUMATIC ACTUATOR) (TO BE FILLED BY PURCHASER) | | | DATA SHEET – B (TO BE FILLED UP BY BIDDER) |
|---|---|---|---|
| PERFORMANCE OF VALVE | LINEARITY | ± 2% | …… |
| | HYSTERISIS | ± 1% | …… |
| | SENSITIVITY | ± 0.5% | …… |
| | ACCURACY (OVERALL) | ± 2% | …… |

| | SL. No. + | LOAD | FLOW (T/HR) | INLET PR. $KG/CM^2(A)$ | OUTLET PR. $KG/CM^2(A)$ | TEMP DEG (C) | CALC ULATED CV | % VLV LIFT | VLV O/L VELOCITY |
|---|---|---|---|---|---|---|---|---|---|
| SERVICE CONDITION | 1. | 40% MCR | 43.8 | 17.0 | 0.3 | 202.7 | | | |
| | 2. | 60% MCR | 70.5 | 26.0 | 0.3 | 224.9 | | | |
| | 3. | 100% MCR | 143.8 | 40.2 | 0.3 | 250 | | | |
| | 4. | VWO | 154.2 | 42 | 0.3 | 252.6 | | | |
| | 5. | BMCR / VWO | 158.5 | 41.4 | 0.5 | 251.9 | | | |
| | VALVE TYPE | | | | | | [] CAVITATION [■] FLASHING [■] HIGH DP | | |
| | * MAX SHUT OFF PRESS ( $KG/CM^2g$) 54<br>* BODY DESIGN : PRESS ($KG/CM^2g$) \| TEMP (DEG C) 54/VACUUM \| 260<br>* IBR FORM III-C [] REQUIRED [■] NOT REQUIRED | | | | | | …… …….\|……. …… | | |
| | TOTAL WEIGHT (VALVE + ACTUATOR + ACCESSORIES) Kg | | | | | | …… | | |

NOTES:

1. + DESIGN CV SHALL BE BASED ON SERVICE CONDITIONS INDICATED AT SL. NO. ___4____ AND SHALL BE CHECKED FOR ALL OTHER CONDITIONS.

Tag No. :…DRV-11… Qty.: …1 per Unit… Date Sheet No. PES-145-06-DS1-0
KKS Tag:...LCH45AA101

## DATA SHEET – A & B

| DATA SHEET – A FOR CONTROL VALVE (WITH PNEUMATIC ACTUATOR) (TO BE FILLED BY PURCHASER) | | | DATA SHEET – B (TO BE FILLED UP BY BIDDER) |
|---|---|---|---|
| GENERAL | PROJECT | **SCCL–2x600 MW SINGARENI TPP** | …… |
| | SERVICE | HPH-6B ALT. DRAIN TO F/T-B | …… |
| | LOCATION | [■] INDOOR [] OUTDOOR | …… |
| | DUTY | [] ON/OFF [■] MODULATING | …… |
| | PIPE SIZE (inlet / outlet) | 219.1 x 8.18 \| 273 x 9.27 | …… |
| | PIPE MATERIAL (inlet / outlet) | SA 106 GR C \| SA 106 GR C | ……\|…… |
| BODY | MODEL NO. | Bidder to Specify | …… |
| | TYPE OF BODY: GUIDING : NO. OF PORTS | [■] GLOBE [] ANGLE \| [] TOP [■] CAGE \| ONE | ……\|……\|……\|…… |
| | BODY SIZE: PORT SIZE: DESIGN CV | Bidder to Specify | ……\|……\|…… |
| | END CONNECTION & RATING (ANSI) | [■] BWE [] SWE [] FLANGED | …… |
| | BODY MATERIAL | [] A216 WCB [■] A217 WC9 [] SS [] A217 CS [] A351 CF8M | …… |
| | PACKING: MATERIAL SINGLE / DOUBLE | [] PTFE [■] GRAFOIL [■] DOUBLE [] SINGLE | …… |
| | BONNET TYPE | [] STD [] EXTENDED [] FINNED | …… |
| | TRIM FORM | [■] LINEAR [] EQ. PERCENTAGE | ……\|…… |
| | | [] QUICK OPEN (ON/OFF) | ……\|…… |
| | TRIM MATERIAL: SEAT \| PLUG | 440C \| 440C | …… |
| | : CAGE \| GUIDE BUSH | 440C \| 440C | …… |
| | FLOW | [] BELOW SEAT [] ABOVE SEAT | ……\|…… |
| | OUTLET VELOCITY | [■] < 7 M/SEC (WATER) \| [] MAC NO. < 1/3(STM) | …… |
| | REQUIRED LEAKAGE CLASS | [] II [] III [] IV [■] V [] VI | …… |
| | NOISE LEVEL (dBA) (spec. 3.1.14) | LESS THAN 85 dBA | …… |
| | VACUUM SERVICE | [■] YES [] NO | …… |
| | ANTI CAVITATION TRIM | [■] YES [] NO | …… |
| PNEUMATIC ACTUATOR | MODEL NO. & SIZE | Bidder to Specify | ……\|…… |
| | CLOSE AT : OPEN AT ($KG/CM^2g$) | 1 \| 0.2 | ……\|…… |
| | TRAVEL TIME FOR OPEN TO CLOSE, CLOSE TO OPEN | < 10 SEC \| | …… |
| | VALVE POSN. ON SIGNAL AIR FAILURE | [■] TO OPEN [] STAYPUT [] TO CLOSE | …… |
| | VALVE POSN. ON SUPPLY AIR FAILURE | [■] STAYPUT | …… |
| ACCESSORIES | POSITIONER (SMART ELECTRO PNEUMATIC) | [■] REQUIRED [] NOT REQUIRED | …… |
| | AIR FILTER REGULATOR | [■] REQUIRED [] NOT REQUIRED | …… |
| | AIR LOCK RELAY | [■] REQUIRED [] NOT REQUIRED | …… |
| | POSITION LIMIT SWITCH | [■] REQUIRED [] NOT REQUIRED | …… |
| | POSITION TRANSMITTER | PART OF POSITIONER | …… |
| | SOLENOID VALVE | [■] REQUIRED [] NOT REQUIRED | …… |
| | E/P CONVERTER | PART OF POSITIONER | …… |
| | JUNCTION BOX | [■] REQUIRED [] NOT REQUIRED | …… |
| | HAND WHEEL (SIDE MOUNTED) | [■] REQUIRED | …… |
| | LOCAL POSITION INDICATOR | [■] REQUIRED | …… |

| | DATA SHEET FOR CONTROL VALVES (WITH PNEUMATIC ACTUATOR) | SPECIFICATION NO.: PE-TS-381-145-I004 | |
|---|---|---|---|
| | | VOLUME II-B | |
| | | SECTION D | |
| | | REV. NO. 00 | DATE : 14/03/2013 |
| | | SHEET 35 OF 62 | |

Tag No. :…DRV-11… Qty.: …1 per Unit… Date Sheet No. PES-145-06-DS1-0
KKS Tag:...LCH45AA101

## DATA SHEET – A & B

| DATA SHEET – A FOR CONTROL VALVE (WITH PNEUMATIC ACTUATOR) (TO BE FILLED BY PURCHASER) | | | DATA SHEET – B (TO BE FILLED UP BY BIDDER) |
|---|---|---|---|
| PERFORMANCE OF VALVE | LINEARITY | ± 2% | …… |
| | HYSTERISIS | ± 1% | …… |
| | SENSITIVITY | ± 0.5% | …… |
| | ACCURACY (OVERALL) | ± 2% | …… |

| | SL. No. + | LOAD | FLOW (T/HR) | INLET PR. $KG/CM^2(A)$ | OUTLET PR. $KG/CM^2(A)$ | TEMP DEG (C) | CALC ULATED CV | % VLV LIFT | VLV O/L VELOCITY |
|---|---|---|---|---|---|---|---|---|---|
| SERVICE CONDITION | 1. | 40% MCR | 43.8 | 17.0 | 0.3 | 202.7 | | | |
| | 2. | 60% MCR | 70.5 | 26.0 | 0.3 | 224.9 | | | |
| | 3. | 100% MCR | 143.8 | 40.2 | 0.3 | 250 | | | |
| | 4. | VWO | 154.2 | 42 | 0.3 | 252.6 | | | |
| | 5. | BMCR / VWO | 158.5 | 41.4 | 0.5 | 251.9 | | | |
| | VALVE TYPE | | | | | | [] CAVITATION [■] FLASHING [■] HIGH DP | | |
| | * MAX SHUT OFF PRESS ( $KG/CM^2g$) 54<br>* BODY DESIGN : PRESS ($KG/CM^2g$) \| TEMP (DEG C) 54/VACUUM \| 260<br>* IBR FORM III-C [] REQUIRED [■] NOT REQUIRED | | | | | | …… …….\|……. …… | | |
| | TOTAL WEIGHT (VALVE + ACTUATOR + ACCESSORIES) Kg | | | | | | …… | | |

NOTES:

1. + DESIGN CV SHALL BE BASED ON SERVICE CONDITIONS INDICATED AT SL. NO. ___4____ AND SHALL BE CHECKED FOR ALL OTHER CONDITIONS.

Tag No. :…DRV-15… Qty.: …1 per Unit… Date Sheet No. PES-145-06-DS1-0
KKS Tag:...LCH10AA101

## DATA SHEET – A & B

| DATA SHEET – A FOR CONTROL VALVE (WITH PNEUMATIC ACTUATOR) (TO BE FILLED BY PURCHASER) | | | DATA SHEET – B (TO BE FILLED UP BY BIDDER) |
|---|---|---|---|
| GENERAL | PROJECT | **SCCL–2x600 MW SINGARENI TPP** | …… |
| | SERVICE | HPH-5A NORMAL DRAIN TO DEAERATOR | …… |
| | LOCATION | [■] INDOOR [] OUTDOOR | …… |
| | DUTY | [] ON/OFF [■] MODULATING | …… |
| | PIPE SIZE (inlet / outlet) | 273 x 9.27 \| 273 x 9.27 | …… |
| | PIPE MATERIAL (inlet / outlet) | SA 106 GR B \| SA 106 GR B | ……\|…… |
| BODY | MODEL NO. | Bidder to Specify | …… |
| | TYPE OF BODY: GUIDING : NO. OF PORTS | [■] GLOBE [] ANGLE \| [] TOP [■] CAGE \| ONE | ……\|……\|……\|…… |
| | BODY SIZE: PORT SIZE: DESIGN CV | Bidder to Specify | ……\|……\|…… |
| | END CONNECTION & RATING (ANSI) | [■] BWE [] SWE [] FLANGED | …… |
| | BODY MATERIAL | [] A216 WCB [■] A217 WC6 [] SS [] A217 CS [] A351 CF8M | …… |
| | PACKING: MATERIAL SINGLE / DOUBLE | [] PTFE [■] GRAFOIL [] DOUBLE [■] SINGLE | …… |
| | BONNET TYPE | [] STD [] EXTENDED [] FINNED | …… |
| | TRIM FORM | [■] LINEAR [] EQ. PERCENTAGE | ……\|…… |
| | TRIM MATERIAL: SEAT \| PLUG | [] QUICK OPEN (ON/OFF) | ……\|…… |
| | : CAGE \| GUIDE BUSH | 17-4 PH SS \| 17-4 PH SS | …… |
| | FLOW | 17-4 PH SS \| 17-4 PH SS | …… |
| | OUTLET VELOCITY | [] BELOW SEAT [] ABOVE SEAT | ……\|…… |
| | REQUIRED LEAKAGE CLASS | [■] < 7 M/SEC (WATER) \| [] MAC NO. < 1/3(STM) | …… |
| | NOISE LEVEL (dBA) (spec. 3.1.14) | [] II [] III [■] IV [] V [] VI | …… |
| | VACUUM SERVICE | LESS THAN 85 dBA | …… |
| | ANTI CAVITATION TRIM | [] YES [■] NO | …… |
| | | [] YES [■] NO | |
| PNEUMATIC ACTUATOR | MODEL NO. & SIZE | Bidder to Specify | ……\|…… |
| | CLOSE AT : OPEN AT (KG/CM$^2$g) | 0.2 \| 1 | ……\|…… |
| | TRAVEL TIME FOR | < 10 SEC | …… |
| | OPEN TO CLOSE, CLOSE TO OPEN | \| | …… |
| | VALVE POSN. ON SIGNAL AIR FAILURE | [] TO OPEN [] STAYPUT [■] TO CLOSE | …… |
| | VALVE POSN. ON SUPPLY AIR FAILURE | [■] STAYPUT | …… |
| ACCESSORIES | POSITIONER (SMART ELECTRO PNEUMATIC) | [■] REQUIRED [] NOT REQUIRED | …… |
| | AIR FILTER REGULATOR | [■] REQUIRED [] NOT REQUIRED | …… |
| | AIR LOCK RELAY | [■] REQUIRED [] NOT REQUIRED | …… |
| | POSITION LIMIT SWITCH | [■] REQUIRED [] NOT REQUIRED | …… |
| | POSITION TRANSMITTER | PART OF POSITIONER | …… |
| | SOLENOID VALVE | [■] REQUIRED [] NOT REQUIRED | …… |
| | E/P CONVERTER | PART OF POSITIONER | …… |
| | JUNCTION BOX | [■] REQUIRED [] NOT REQUIRED | …… |
| | HAND WHEEL (SIDE MOUNTED) | [■] REQUIRED | …… |
| | LOCAL POSITION INDICATOR | [■] REQUIRED | …… |

| | DATA SHEET FOR CONTROL VALVES (WITH PNEUMATIC ACTUATOR) | SPECIFICATION NO.: PE-TS-381-145-I004 | |
|---|---|---|---|
| | | VOLUME II-B | |
| | | SECTION D | |
| | | REV. NO. 00 | DATE : 14/03/2013 |
| | | SHEET 37 OF 62 | |

Tag No. :…DRV-15… Qty.: …1 per Unit… Date Sheet No. PES-145-06-DS1-0
KKS Tag:...LCH10AA101

## DATA SHEET – A & B

| DATA SHEET – A FOR CONTROL VALVE (WITH PNEUMATIC ACTUATOR) (TO BE FILLED BY PURCHASER) | | | DATA SHEET – B (TO BE FILLED UP BY BIDDER) |
|---|---|---|---|
| PERFORMANCE OF VALVE | LINEARITY | ± 2% | …… |
| | HYSTERISIS | ± 1% | …… |
| | SENSITIVITY | ± 0.5% | …… |
| | ACCURACY (OVERALL) | ± 2% | …… |

| | SL. No. + | LOAD | FLOW (T/HR) | INLET PR. $KG/CM^2(A)$ | OUTLET PR. $KG/CM^2(A)$ | TEMP DEG (C) | CALC ULATED CV | % VLV LIFT | VLV O/L VELOCITY |
|---|---|---|---|---|---|---|---|---|---|
| SERVICE CONDITION | 1. | 40% MCR | 60.3 | 5.1 | 4.1 | 144.1 | | | |
| | 2. | 60% MCR | 101 | 8.8 | 5.1 | 152.6 | | | |
| | 3. | 100% MCR | 196.7 | 15.1 | 7.6 | 171.4 | | | |
| | 4. | VWO | 209.5 | 15.9 | 7.9 | 173.5 | | | |
| | 5. | BMCR / VWO | 216.1 | 15.5 | 7.7 | 172.2 | | | |
| | VALVE TYPE | | | | | | [] CAVITATION [■] FLASHING [] HIGH DP | | |
| | * MAX SHUT OFF PRESS ( $KG/CM^2g$) 20<br>* BODY DESIGN : PRESS ($KG/CM^2g$) \| TEMP (DEG C) 20 \| 180<br>* IBR FORM III-C [] REQUIRED [■] NOT REQUIRED | | | | | | …… …….\|……. …… | | |
| | TOTAL WEIGHT (VALVE + ACTUATOR + ACCESSORIES) Kg | | | | | | …… | | |

NOTES:

1. + DESIGN CV SHALL BE BASED ON SERVICE CONDITIONS INDICATED AT SL. NO. ___4____ AND SHALL BE CHECKED FOR ALL OTHER CONDITIONS.

Tag No. :…DRV-22… Qty.: …1 per Unit… Date Sheet No. PES-145-06-DS1-0
KKS Tag:...LCH20AA101

## DATA SHEET – A & B

| DATA SHEET – A FOR CONTROL VALVE (WITH PNEUMATIC ACTUATOR) (TO BE FILLED BY PURCHASER) | | | DATA SHEET – B (TO BE FILLED UP BY BIDDER) |
|---|---|---|---|
| GENERAL | PROJECT<br>SERVICE<br>LOCATION<br>DUTY<br>PIPE SIZE (inlet / outlet)<br>PIPE MATERIAL (inlet / outlet) | **SCCL–2x600 MW SINGARENI TPP**<br>HPH-5B NORMAL DRAIN TO DEAERATOR<br>[■] INDOOR [] OUTDOOR<br>[] ON/OFF [■] MODULATING<br>273 x 9.27 \| 273 x 9.27<br>SA 106 GR B \| SA 106 GR B | ……<br>……<br>……<br>……<br>……<br>……\|…… |
| BODY | MODEL NO.<br>TYPE OF BODY: GUIDING : NO. OF PORTS<br>BODY SIZE: PORT SIZE: DESIGN CV<br>END CONNECTION & RATING (ANSI)<br>BODY MATERIAL<br><br>PACKING: MATERIAL SINGLE / DOUBLE<br>BONNET TYPE<br>TRIM FORM<br><br>TRIM MATERIAL: SEAT \| PLUG<br>: CAGE \| GUIDE BUSH<br>FLOW<br>OUTLET VELOCITY<br><br>REQUIRED LEAKAGE CLASS<br>NOISE LEVEL (dBA) (spec. 3.1.14)<br>VACUUM SERVICE<br>ANTI CAVITATION TRIM | Bidder to Specify<br>[■] GLOBE [] ANGLE \| [] TOP [■] CAGE \| ONE<br><br>Bidder to Specify<br>[■] BWE [] SWE [] FLANGED<br>[] A216 WCB [■] A217 WC6 [] SS [] A217 CS<br>[] A351 CF8M<br>[] PTFE [■] GRAFOIL [] DOUBLE [■] SINGLE<br>[] STD [] EXTENDED [] FINNED<br>[■] LINEAR [] EQ. PERCENTAGE<br>[] QUICK OPEN (ON/OFF)<br>17-4 PH SS \| 17-4 PH SS<br>17-4 PH SS \| 17-4 PH SS<br>[] BELOW SEAT [] ABOVE SEAT<br>[■] < 7 M/SEC (WATER) \| [] MAC NO. < 1/3(STM)<br>[] II [] III [■] IV [] V [] VI<br>LESS THAN 85 dBA<br>[] YES [■] NO<br>[] YES [■] NO | ……<br>……\|……\|……\|……<br>……\|……\|……<br>……<br>……<br>……<br>……<br>……<br>……\|……<br>……\|……<br>……<br>……<br>……\|……<br>……<br>……<br>……<br>…… |
| PNEUMATIC ACTUATOR | MODEL NO. & SIZE<br>CLOSE AT : OPEN AT (KG/CM$^2$g)<br>TRAVEL TIME FOR<br>OPEN TO CLOSE, CLOSE TO OPEN<br>VALVE POSN. ON SIGNAL AIR FAILURE<br>VALVE POSN. ON SUPPLY AIR FAILURE | Bidder to Specify<br>0.2 \| 1<br>< 10 SEC<br>\|<br>[] TO OPEN [] STAYPUT [■] TO CLOSE<br>[■] STAYPUT | ……\|……<br>……\|……<br>……<br>……<br>……<br>…… |
| ACCESSORIES | POSITIONER (SMART ELECTRO PNEUMATIC)<br>AIR FILTER REGULATOR<br>AIR LOCK RELAY<br>POSITION LIMIT SWITCH<br>POSITION TRANSMITTER<br>SOLENOID VALVE<br>E/P CONVERTER<br>JUNCTION BOX<br>HAND WHEEL (SIDE MOUNTED)<br>LOCAL POSITION INDICATOR | [■] REQUIRED [] NOT REQUIRED<br><br>[■] REQUIRED [] NOT REQUIRED<br>[■] REQUIRED [] NOT REQUIRED<br>[■] REQUIRED [] NOT REQUIRED<br>PART OF POSITIONER<br>[■] REQUIRED [] NOT REQUIRED<br>PART OF POSITIONER<br>[■] REQUIRED [] NOT REQUIRED<br>[■] REQUIRED<br>[■] REQUIRED | ……<br>……<br>……<br>……<br>……<br>……<br>……<br>……<br>……<br>…… |

| | DATA SHEET FOR CONTROL VALVES (WITH PNEUMATIC ACTUATOR) | SPECIFICATION NO.: PE-TS-381-145-I004 | |
|---|---|---|---|
| | | VOLUME II-B | |
| | | SECTION D | |
| | | REV. NO. 00 | DATE : 14/03/2013 |
| | | SHEET 39 OF 62 | |

Tag No. :…DRV-22… Qty.: …1 per Unit… Date Sheet No. PES-145-06-DS1-0
KKS Tag:...LCH20AA101

## DATA SHEET – A & B

| DATA SHEET – A FOR CONTROL VALVE (WITH PNEUMATIC ACTUATOR) (TO BE FILLED BY PURCHASER) | | | DATA SHEET – B (TO BE FILLED UP BY BIDDER) |
|---|---|---|---|
| PERFORMANCE OF VALVE | LINEARITY | ± 2% | …… |
| | HYSTERISIS | ± 1% | …… |
| | SENSITIVITY | ± 0.5% | …… |
| | ACCURACY (OVERALL) | ± 2% | …… |

SERVICE CONDITION

| SL. No. + | LOAD | FLOW (T/HR) | INLET PR. KG/CM$^2$(A) | OUTLET PR. KG/CM$^2$(A) | TEMP DEG (C) | CALC ULATED CV | % VLV LIFT | VLV O/L VELOCITY |
|---|---|---|---|---|---|---|---|---|
| 1. | 40% MCR | 60.3 | 5.1 | 4.1 | 144.1 | | | |
| 2. | 60% MCR | 101 | 8.8 | 5.1 | 152.6 | | | |
| 3. | 100% MCR | 196.7 | 15.1 | 7.6 | 171.4 | | | |
| 4. | VWO | 209.5 | 15.9 | 7.9 | 173.5 | | | |
| 5. | BMCR / VWO | 216.1 | 15.5 | 7.7 | 172.2 | | | |

| | |
|---|---|
| VALVE TYPE | [] CAVITATION [■] FLASHING<br>[] HIGH DP |
| * MAX SHUT OFF PRESS ( KG/CM$^2$g) 20<br>* BODY DESIGN : PRESS (KG/CM$^2$g) \| TEMP (DEG C) 20 \| 180<br>* IBR FORM III-C [] REQUIRED [■] NOT REQUIRED | ……<br>……\|……<br>…… |
| TOTAL WEIGHT (VALVE + ACTUATOR + ACCESSORIES) Kg | …… |

NOTES:

1. + DESIGN CV SHALL BE BASED ON SERVICE CONDITIONS INDICATED AT SL. NO. ___4____ AND SHALL BE CHECKED FOR ALL OTHER CONDITIONS.

Tag No. :…DRV-18… Qty.: …1 per Unit… Date Sheet No. PES-145-06-DS1-0
KKS Tag:...LCH15AA101

## DATA SHEET – A & B

| DATA SHEET – A FOR CONTROL VALVE (WITH PNEUMATIC ACTUATOR) (TO BE FILLED BY PURCHASER) | | | DATA SHEET – B (TO BE FILLED UP BY BIDDER) |
|---|---|---|---|
| GENERAL | PROJECT<br>SERVICE<br>LOCATION<br>DUTY<br>PIPE SIZE (inlet / outlet)<br>PIPE MATERIAL (inlet / outlet) | **SCCL–2x600 MW SINGARENI TPP**<br>HPH-5A ALT. DRAIN TO F/T-A<br>[■] INDOOR [] OUTDOOR<br>[] ON/OFF [■] MODULATING<br>273 x 6.35 \| 323.9 x 9.53<br>SA 106 GR B \| SA 106 GR B | ……<br>……<br>……<br>……<br>……<br>……\|…… |
| BODY | MODEL NO.<br>TYPE OF BODY: GUIDING : NO. OF PORTS<br>BODY SIZE: PORT SIZE: DESIGN CV<br>END CONNECTION & RATING (ANSI)<br>BODY MATERIAL<br><br>PACKING: MATERIAL SINGLE / DOUBLE<br>BONNET TYPE<br>TRIM FORM<br><br>TRIM MATERIAL: SEAT \| PLUG<br>: CAGE \| GUIDE BUSH<br>FLOW<br>OUTLET VELOCITY<br><br>REQUIRED LEAKAGE CLASS<br>NOISE LEVEL (dBA) (spec. 3.1.14)<br>VACUUM SERVICE<br>ANTI CAVITATION TRIM | Bidder to Specify<br>[■] GLOBE [] ANGLE \| [] TOP [■] CAGE \| ONE<br><br>Bidder to Specify<br>[■] BWE [] SWE [] FLANGED<br>[] A216 WCB [■] A217 WC9 [] SS [] A217 CS<br>[] A351 CF8M<br>[] PTFE [■] GRAFOIL [■] DOUBLE [] SINGLE<br>[] STD [] EXTENDED [] FINNED<br>[■] LINEAR [] EQ. PERCENTAGE<br>[] QUICK OPEN (ON/OFF)<br>440C \| 440C<br>440C \| 440C<br>[] BELOW SEAT [] ABOVE SEAT<br>[■]< 7 M/SEC (WATER) \| [] MAC NO. < 1/3(STM)<br>[] II [] III [] IV [■] V [] VI<br>LESS THAN 85 dBA<br>[■] YES [] NO<br>[■] YES [] NO | ……<br>……\|……\|……\|……<br>……\|……\|……<br>……<br>……<br>……<br>……<br>……<br>……\|……<br>……\|……<br>……<br>……<br>……\|……<br>……<br>……<br>……<br>…… |
| PNEUMATIC ACTUATOR | MODEL NO. & SIZE<br>CLOSE AT : OPEN AT (KG/CM$^2$g)<br>TRAVEL TIME FOR<br>OPEN TO CLOSE, CLOSE TO OPEN<br>VALVE POSN. ON SIGNAL AIR FAILURE<br>VALVE POSN. ON SUPPLY AIR FAILURE | Bidder to Specify<br>1 \| 0.2<br>< 10 SEC<br>\|<br>[■] TO OPEN [] STAYPUT [] TO CLOSE<br>[■] STAYPUT | ……\|……<br>……\|……<br>……<br>……<br>……<br>…… |
| ACCESSORIES | POSITIONER (SMART ELECTRO PNEUMATIC)<br>AIR FILTER REGULATOR<br>AIR LOCK RELAY<br>POSITION LIMIT SWITCH<br>POSITION TRANSMITTER<br>SOLENOID VALVE<br>E/P CONVERTER<br>JUNCTION BOX<br>HAND WHEEL (SIDE MOUNTED)<br>LOCAL POSITION INDICATOR | [■] REQUIRED [] NOT REQUIRED<br><br>[■] REQUIRED [] NOT REQUIRED<br>[■] REQUIRED [] NOT REQUIRED<br>[■] REQUIRED [] NOT REQUIRED<br>PART OF POSITIONER<br>[■] REQUIRED [] NOT REQUIRED<br>PART OF POSITIONER<br>[■] REQUIRED [] NOT REQUIRED<br>[■] REQUIRED<br>[■] REQUIRED | ……<br>……<br>……<br>……<br>……<br>……<br>……<br>……<br>……<br>…… |

| | DATA SHEET FOR CONTROL VALVES (WITH PNEUMATIC ACTUATOR) | SPECIFICATION NO.: PE-TS-381-145-I004 | |
|---|---|---|---|
| | | VOLUME II-B | |
| | | SECTION D | |
| | | REV. NO. 00 | DATE : 14/03/2013 |
| | | SHEET 41 OF 62 | |

Tag No. :…DRV-18… Qty.: …1 per Unit… Date Sheet No. PES-145-06-DS1-0
KKS Tag:...LCH15AA101

## DATA SHEET – A & B

| DATA SHEET – A FOR CONTROL VALVE (WITH PNEUMATIC ACTUATOR) (TO BE FILLED BY PURCHASER) | | | DATA SHEET – B (TO BE FILLED UP BY BIDDER) |
|---|---|---|---|
| PERFORMANCE OF VALVE | LINEARITY | ± 2% | …… |
| | HYSTERISIS | ± 1% | …… |
| | SENSITIVITY | ± 0.5% | …… |
| | ACCURACY (OVERALL) | ± 2% | …… |

| | SL. No. + | LOAD | FLOW (T/HR) | INLET PR. $KG/CM^2(A)$ | OUTLET PR. $KG/CM^2(A)$ | TEMP DEG (C) | CALC ULATED CV | % VLV LIFT | VLV O/L VELOCITY |
|---|---|---|---|---|---|---|---|---|---|
| SERVICE CONDITION | 1. | 40% MCR | 60.3 | 7.7 | 0.3 | 168.8 | | | |
| | 2. | 60% MCR | 101 | 11.4 | 0.3 | 185.6 | | | |
| | 3. | 100% MCR | 196.7 | 17.9 | 0.3 | 206.6 | | | |
| | 4. | VWO | 209.5 | 18.7 | 0.3 | 208.8 | | | |
| | 5. | BMCR / VWO | 216.1 | 18.3 | 0.5 | 207.8 | | | |

| | | |
|---|---|---|
| | VALVE TYPE | [] CAVITATION [■] FLASHING<br>[] HIGH DP |
| | * MAX SHUT OFF PRESS ( $KG/CM^2g$) 20<br>* BODY DESIGN : PRESS ($KG/CM^2g$) \| TEMP (DEG C) 20/VACUUM \| 215<br>* IBR FORM III-C [] REQUIRED [■] NOT REQUIRED | ……<br>……\|……<br>…… |
| | TOTAL WEIGHT (VALVE + ACTUATOR + ACCESSORIES) Kg | …… |

NOTES:

1. + DESIGN CV SHALL BE BASED ON SERVICE CONDITIONS INDICATED AT SL. NO. ___4____ AND SHALL BE CHECKED FOR ALL OTHER CONDITIONS.

Tag No. :…DRV-25… Qty.: …1 per Unit… Date Sheet No. PES-145-06-DS1-0
KKS Tag:...LCH25AA101

## DATA SHEET – A & B

| DATA SHEET – A FOR CONTROL VALVE (WITH PNEUMATIC ACTUATOR) (TO BE FILLED BY PURCHASER) | | | DATA SHEET – B (TO BE FILLED UP BY BIDDER) |
|---|---|---|---|
| GENERAL | PROJECT | **SCCL–2x600 MW SINGARENI TPP** | …… |
| | SERVICE | HPH-5B ALT. DRAIN TO F/T-A | …… |
| | LOCATION | [■] INDOOR [] OUTDOOR | …… |
| | DUTY | [] ON/OFF [■] MODULATING | …… |
| | PIPE SIZE (inlet / outlet) | 273 x 6.35 \| 323.9 x 9.53 | …… |
| | PIPE MATERIAL (inlet / outlet) | SA 106 GR B \| SA 106 GR B | ……\|…… |
| BODY | MODEL NO. | Bidder to Specify | …… |
| | TYPE OF BODY: GUIDING : NO. OF PORTS | [■] GLOBE [] ANGLE \| [] TOP [■] CAGE \| ONE | ……\|……\|……\|…… |
| | BODY SIZE: PORT SIZE: DESIGN CV | Bidder to Specify | ……\|……\|…… |
| | END CONNECTION & RATING (ANSI) | [■] BWE [] SWE [] FLANGED | …… |
| | BODY MATERIAL | [] A216 WCB [■] A217 WC9 [] SS [] A217 CS [] A351 CF8M | …… |
| | PACKING: MATERIAL SINGLE / DOUBLE | [] PTFE [■] GRAFOIL [■] DOUBLE [] SINGLE | …… |
| | BONNET TYPE | [] STD [] EXTENDED [] FINNED | …… |
| | TRIM FORM | [■] LINEAR [] EQ. PERCENTAGE | ……\|…… |
| | | [] QUICK OPEN (ON/OFF) | ……\|…… |
| | TRIM MATERIAL: SEAT \| PLUG | 440C \| 440C | …… |
| | : CAGE \| GUIDE BUSH | 440C \| 440C | …… |
| | FLOW | [] BELOW SEAT [] ABOVE SEAT | ……\|…… |
| | OUTLET VELOCITY | [■] < 7 M/SEC (WATER) \| [] MAC NO. < 1/3(STM) | …… |
| | REQUIRED LEAKAGE CLASS | [] II [] III [] IV [■] V [] VI | …… |
| | NOISE LEVEL (dBA) (spec. 3.1.14) | LESS THAN 85 dBA | …… |
| | VACUUM SERVICE | [■] YES [] NO | …… |
| | ANTI CAVITATION TRIM | [■] YES [] NO | …… |
| PNEUMATIC ACTUATOR | MODEL NO. & SIZE | Bidder to Specify | ……\|…… |
| | CLOSE AT : OPEN AT ($KG/CM^2g$) | 1 \| 0.2 | ……\|…… |
| | TRAVEL TIME FOR OPEN TO CLOSE, CLOSE TO OPEN | < 10 SEC \| | …… |
| | VALVE POSN. ON SIGNAL AIR FAILURE | [■] TO OPEN [] STAYPUT [] TO CLOSE | …… |
| | VALVE POSN. ON SUPPLY AIR FAILURE | [■] STAYPUT | …… |
| ACCESSORIES | POSITIONER (SMART ELECTRO PNEUMATIC) | [■] REQUIRED [] NOT REQUIRED | …… |
| | AIR FILTER REGULATOR | [■] REQUIRED [] NOT REQUIRED | …… |
| | AIR LOCK RELAY | [■] REQUIRED [] NOT REQUIRED | …… |
| | POSITION LIMIT SWITCH | [■] REQUIRED [] NOT REQUIRED | …… |
| | POSITION TRANSMITTER | PART OF POSITIONER | …… |
| | SOLENOID VALVE | [■] REQUIRED [] NOT REQUIRED | …… |
| | E/P CONVERTER | PART OF POSITIONER | …… |
| | JUNCTION BOX | [■] REQUIRED [] NOT REQUIRED | …… |
| | HAND WHEEL (SIDE MOUNTED) | [■] REQUIRED | …… |
| | LOCAL POSITION INDICATOR | [■] REQUIRED | …… |

| | DATA SHEET FOR CONTROL VALVES (WITH PNEUMATIC ACTUATOR) | SPECIFICATION NO.: PE-TS-381-145-I004 | |
|---|---|---|---|
| | | VOLUME II-B | |
| | | SECTION D | |
| | | REV. NO. 00 | DATE : 14/03/2013 |
| | | SHEET 43 OF 62 | |

Tag No. :…DRV-25… Qty.: …1 per Unit… Date Sheet No. PES-145-06-DS1-0
KKS Tag:...LCH25AA101

## DATA SHEET – A & B

| DATA SHEET – A FOR CONTROL VALVE (WITH PNEUMATIC ACTUATOR) (TO BE FILLED BY PURCHASER) | | | DATA SHEET – B (TO BE FILLED UP BY BIDDER) |
|---|---|---|---|
| PERFORMANCE OF VALVE | LINEARITY | ± 2% | …… |
| | HYSTERISIS | ± 1% | …… |
| | SENSITIVITY | ± 0.5% | …… |
| | ACCURACY (OVERALL) | ± 2% | …… |

| SERVICE CONDITION | SL. No. + | LOAD | FLOW (T/HR) | INLET PR. $KG/CM^2(A)$ | OUTLET PR. $KG/CM^2(A)$ | TEMP DEG (C) | CALC ULATED CV | % VLV LIFT | VLV O/L VELOCITY |
|---|---|---|---|---|---|---|---|---|---|
| | 1. | 40% MCR | 60.3 | 7.7 | 0.3 | 168.8 | | | |
| | 2. | 60% MCR | 101 | 11.4 | 0.3 | 185.6 | | | |
| | 3. | 100% MCR | 196.7 | 17.9 | 0.3 | 206.6 | | | |
| | 4. | VWO | 209.5 | 18.7 | 0.3 | 208.8 | | | |
| | 5. | BMCR / VWO | 216.1 | 18.3 | 0.5 | 207.8 | | | |
| | VALVE TYPE | | | | | | [] CAVITATION [■] FLASHING<br>[] HIGH DP | | |
| | * MAX SHUT OFF PRESS ( $KG/CM^2g$) 20<br>* BODY DESIGN : PRESS ($KG/CM^2g$) \| TEMP (DEG C) 20/VACUUM \| 215<br>* IBR FORM III-C [] REQUIRED [■] NOT REQUIRED | | | | | | ……<br>……\|……<br>…… | | |
| | TOTAL WEIGHT (VALVE + ACTUATOR + ACCESSORIES) Kg | | | | | | …… | | |

NOTES:

1. + DESIGN CV SHALL BE BASED ON SERVICE CONDITIONS INDICATED AT SL. NO. ___4____ AND SHALL BE CHECKED FOR ALL OTHER CONDITIONS.

Tag No. :…DRV-28… Qty.: …1 per Unit… Date Sheet No. PES-145-06-DS1-0
KKS Tag:...LCJ30AA101

## DATA SHEET – A & B

| DATA SHEET – A FOR CONTROL VALVE (WITH PNEUMATIC ACTUATOR) (TO BE FILLED BY PURCHASER) | | | DATA SHEET – B (TO BE FILLED UP BY BIDDER) |
|---|---|---|---|
| GENERAL | PROJECT<br>SERVICE<br>LOCATION<br>DUTY<br>PIPE SIZE (inlet / outlet)<br>PIPE MATERIAL (inlet / outlet) | **SCCL–2x600 MW SINGARENI TPP**<br>LPH-3 NORMAL DRAIN TO LPH-2<br>[■] INDOOR [] OUTDOOR<br>[] ON/OFF [■] MODULATING<br>168.3 x 7.11 \| 219.1 x 8.18<br>SA 106 GR B \| SA 106 GR B | ……<br>……<br>……<br>……<br>……<br>……\|…… |
| BODY | MODEL NO.<br>TYPE OF BODY: GUIDING : NO. OF PORTS<br>BODY SIZE: PORT SIZE: DESIGN CV<br>END CONNECTION & RATING (ANSI)<br>BODY MATERIAL<br><br>PACKING: MATERIAL SINGLE / DOUBLE<br>BONNET TYPE<br>TRIM FORM<br><br>TRIM MATERIAL: SEAT \| PLUG<br>: CAGE \| GUIDE BUSH<br>FLOW<br>OUTLET VELOCITY<br><br>REQUIRED LEAKAGE CLASS<br>NOISE LEVEL (dBA) (spec. 3.1.14)<br>VACUUM SERVICE<br>ANTI CAVITATION TRIM | Bidder to Specify<br>[■] GLOBE [] ANGLE \| [] TOP [■] CAGE \| ONE<br><br>Bidder to Specify<br>[■] BWE [] SWE [] FLANGED<br>[] A216 WCB [■] A217 WC6 [] SS [] A217 CS<br>[] A351 CF8M<br>[] PTFE [■] GRAFOIL [■] DOUBLE [] SINGLE<br>[] STD [] EXTENDED [] FINNED<br>[■] LINEAR [] EQ. PERCENTAGE<br>[] QUICK OPEN (ON/OFF)<br>17-4 PH SS \| 17-4 PH SS<br>17-4 PH SS \| 17-4 PH SS<br>[] BELOW SEAT [] ABOVE SEAT<br>[■] < 7 M/SEC (WATER) \| [] MAC NO. < 1/3(STM)<br>[] II [] III [■] IV [] V [] VI<br>LESS THAN 85 dBA<br>[■] YES [] NO<br>[] YES [■] NO | ……<br>……\|……\|……\|……<br>……\|……\|……<br>……<br>……<br>……<br>……<br>……<br>……\|……<br>……\|……<br>……<br>……<br>……\|……<br>……<br>……<br>……<br>…… |
| PNEUMATIC ACTUATOR | MODEL NO. & SIZE<br>CLOSE AT : OPEN AT (KG/CM$^2$g)<br>TRAVEL TIME FOR<br>OPEN TO CLOSE, CLOSE TO OPEN<br>VALVE POSN. ON SIGNAL AIR FAILURE<br>VALVE POSN. ON SUPPLY AIR FAILURE | Bidder to Specify<br>0.2 \| 1<br>< 10 SEC<br>\|<br>[] TO OPEN [] STAYPUT [■] TO CLOSE<br>[■] STAYPUT | ……\|……<br>……\|……<br>……<br>……<br>……<br>…… |
| ACCESSORIES | POSITIONER (SMART ELECTRO PNEUMATIC)<br>AIR FILTER REGULATOR<br>AIR LOCK RELAY<br>POSITION LIMIT SWITCH<br>POSITION TRANSMITTER<br>SOLENOID VALVE<br>E/P CONVERTER<br>JUNCTION BOX<br>HAND WHEEL (SIDE MOUNTED)<br>LOCAL POSITION INDICATOR | [■] REQUIRED [] NOT REQUIRED<br><br>[■] REQUIRED [] NOT REQUIRED<br>[■] REQUIRED [] NOT REQUIRED<br>[■] REQUIRED [] NOT REQUIRED<br>PART OF POSITIONER<br>[■] REQUIRED [] NOT REQUIRED<br>PART OF POSITIONER<br>[■] REQUIRED [] NOT REQUIRED<br>[■] REQUIRED<br>[■] REQUIRED | ……<br>……<br>……<br>……<br>……<br>……<br>……<br>……<br>……<br>…… |

| | DATA SHEET FOR CONTROL VALVES (WITH PNEUMATIC ACTUATOR) | SPECIFICATION NO.: PE-TS-381-145-I004 | |
|---|---|---|---|
| | | VOLUME II-B | |
| | | SECTION D | |
| | | REV. NO. 00 | DATE : 14/03/2013 |
| | | SHEET 45 OF 62 | |

Tag No. :…DRV-28… Qty.: …1 per Unit… Date Sheet No. PES-145-06-DS1-0
KKS Tag:...LCJ30AA101

## DATA SHEET – A & B

| DATA SHEET – A FOR CONTROL VALVE (WITH PNEUMATIC ACTUATOR) (TO BE FILLED BY PURCHASER) | | | DATA SHEET – B (TO BE FILLED UP BY BIDDER) |
|---|---|---|---|
| PERFORMANCE OF VALVE | LINEARITY<br>HYSTERISIS<br>SENSITIVITY<br>ACCURACY (OVERALL) | ± 2%<br>± 1%<br>± 0.5%<br>± 2% | ……<br>……<br>……<br>…… |

SERVICE CONDITION

| SL. No. + | LOAD | FLOW (T/HR) | INLET PR. $KG/CM^2(A)$ | OUTLET PR. $KG/CM^2(A)$ | TEMP DEG (C) | CALC ULATED CV | % VLV LIFT | VLV O/L VELOCITY |
|---|---|---|---|---|---|---|---|---|
| 1. | 40% MCR | 27.2 | 1.1 | 0.65 | 79.2 | | | |
| 2. | 60% MCR | 39.4 | 1.45 | 0.96 | 87.3 | | | |
| 3. | 100% MCR | 69.7 | 2.17 | 1.3 | 98.8 | | | |
| 4. | VWO | 73.6 | 2.16 | 1.35 | 100 | | | |
| 5. | BOTH STRINGS HPH OUT OF SERVICE | 77.6 | 2.25 | 1.43 | 101.8 | | | |

| | |
|---|---|
| VALVE TYPE | [] CAVITATION [■] FLASHING<br>[] HIGH DP |
| * MAX SHUT OFF PRESS ( $KG/CM^2g$) 7<br>* BODY DESIGN : PRESS ($KG/CM^2g$) \| TEMP (DEG C) 7/VACUUM \| 110<br>* IBR FORM III-C [] REQUIRED [■] NOT REQUIRED | ……<br>……\|……<br>…… |
| TOTAL WEIGHT (VALVE + ACTUATOR + ACCESSORIES) Kg | …… |

NOTES:

1. + DESIGN CV SHALL BE BASED ON SERVICE CONDITIONS INDICATED AT SL. NO. ___4____ AND SHALL BE CHECKED FOR ALL OTHER CONDITIONS.

Tag No. :…DRV-31… Qty.: …1 per Unit… Date Sheet No. PES-145-06-DS1-0
KKS Tag:...LCJ31AA101

## DATA SHEET – A & B

| DATA SHEET – A FOR CONTROL VALVE (WITH PNEUMATIC ACTUATOR) (TO BE FILLED BY PURCHASER) | | | DATA SHEET – B (TO BE FILLED UP BY BIDDER) |
|---|---|---|---|
| GENERAL | PROJECT<br>SERVICE<br>LOCATION<br>DUTY<br>PIPE SIZE (inlet / outlet)<br>PIPE MATERIAL (inlet / outlet) | **SCCL–2x600 MW SINGARENI TPP**<br>LPH-3 ALT. DRAIN TO F/T-A<br>[■] INDOOR [] OUTDOOR<br>[] ON/OFF [■] MODULATING<br>168.3 x 7.11 \| 219.1 x 8.18<br>SA 106 GR B \| SA 106 GR B | ……<br>……<br>……<br>……<br>……<br>……\|…… |
| BODY | MODEL NO.<br>TYPE OF BODY: GUIDING : NO. OF PORTS<br>BODY SIZE: PORT SIZE: DESIGN CV<br>END CONNECTION & RATING (ANSI)<br>BODY MATERIAL<br><br>PACKING: MATERIAL SINGLE / DOUBLE<br>BONNET TYPE<br>TRIM FORM<br><br>TRIM MATERIAL: SEAT \| PLUG<br>: CAGE \| GUIDE BUSH<br>FLOW<br>OUTLET VELOCITY<br><br>REQUIRED LEAKAGE CLASS<br>NOISE LEVEL (dBA) (spec. 3.1.14)<br>VACUUM SERVICE<br>ANTI CAVITATION TRIM | Bidder to Specify<br>[■] GLOBE [] ANGLE \| [] TOP [■] CAGE \| ONE<br><br>Bidder to Specify<br>[■] BWE [] SWE [] FLANGED<br>[] A216 WCB [■] A217 WC9 [] SS [] A217 CS<br>[] A351 CF8M<br>[] PTFE [■] GRAFOIL [■] DOUBLE [] SINGLE<br>[] STD [] EXTENDED [] FINNED<br>[■] LINEAR [] EQ. PERCENTAGE<br>[] QUICK OPEN (ON/OFF)<br>440C \| 440C<br>440C \| 440C<br>[] BELOW SEAT [] ABOVE SEAT<br>[■] < 7 M/SEC (WATER) \| [] MAC NO. < 1/3(STM)<br>[] II [] III [] IV [■] V [] VI<br>LESS THAN 85 dBA<br>[■] YES [] NO<br>[■] YES [] NO | ……<br>……\|……\|……\|……<br>……\|……\|……<br>……<br>……<br>……<br>……<br>……<br>……\|……<br>……\|……<br>……<br>……<br>……\|……<br>……<br>……<br>……<br>…… |
| PNEUMATIC ACTUATOR | MODEL NO. & SIZE<br>CLOSE AT : OPEN AT (KG/CM$^2$g)<br>TRAVEL TIME FOR<br>OPEN TO CLOSE, CLOSE TO OPEN<br>VALVE POSN. ON SIGNAL AIR FAILURE<br>VALVE POSN. ON SUPPLY AIR FAILURE | Bidder to Specify<br>1 \| 0.2<br>< 10 SEC<br>\|<br>[■] TO OPEN [] STAYPUT [] TO CLOSE<br>[■] STAYPUT | ……\|……<br>……\|……<br>……<br>……<br>……<br>…… |
| ACCESSORIES | POSITIONER (SMART ELECTRO PNEUMATIC)<br>AIR FILTER REGULATOR<br>AIR LOCK RELAY<br>POSITION LIMIT SWITCH<br>POSITION TRANSMITTER<br>SOLENOID VALVE<br>E/P CONVERTER<br>JUNCTION BOX<br>HAND WHEEL (SIDE MOUNTED)<br>LOCAL POSITION INDICATOR | [■] REQUIRED [] NOT REQUIRED<br><br>[■] REQUIRED [] NOT REQUIRED<br>[■] REQUIRED [] NOT REQUIRED<br>[■] REQUIRED [] NOT REQUIRED<br>PART OF POSITIONER<br>[■] REQUIRED [] NOT REQUIRED<br>PART OF POSITIONER<br>[■] REQUIRED [] NOT REQUIRED<br>[■] REQUIRED<br>[■] REQUIRED | ……<br>……<br>……<br>……<br>……<br>……<br>……<br>……<br>……<br>…… |

| | DATA SHEET FOR CONTROL VALVES (WITH PNEUMATIC ACTUATOR) | SPECIFICATION NO.: PE-TS-381-145-I004 | |
|---|---|---|---|
| | | VOLUME II-B | |
| | | SECTION D | |
| | | REV. NO. 00 | DATE : 14/03/2013 |
| | | SHEET 47 OF 62 | |

Tag No. :…DRV-31… Qty.: …1 per Unit… Date Sheet No. PES-145-06-DS1-0
KKS Tag:...LCJ31AA101

## DATA SHEET – A & B

| DATA SHEET – A FOR CONTROL VALVE (WITH PNEUMATIC ACTUATOR) (TO BE FILLED BY PURCHASER) | | | DATA SHEET – B (TO BE FILLED UP BY BIDDER) |
|---|---|---|---|
| PERFORMANCE OF VALVE | LINEARITY | ± 2% | …… |
| | HYSTERISIS | ± 1% | …… |
| | SENSITIVITY | ± 0.5% | …… |
| | ACCURACY (OVERALL) | ± 2% | …… |

SERVICE CONDITION

| SL. No. + | LOAD | FLOW (T/HR) | INLET PR. $KG/CM^2(A)$ | OUTLET PR. $KG/CM^2(A)$ | TEMP DEG (C) | CALC ULATED CV | % VLV LIFT | VLV O/L VELOCITY |
|---|---|---|---|---|---|---|---|---|
| 1. | 40% MCR | 27.2 | 1.5 | 0.3 | 103.5 | | | |
| 2. | 60% MCR | 39.4 | 1.8 | 0.3 | 112.2 | | | |
| 3. | 100% MCR | 69.7 | 2.7 | 0.3 | 125.7 | | | |
| 4. | VWO | 73.6 | 2.8 | 0.3 | 127 | | | |
| 5. | LPH-2 OUT | 104.3 | 2.2 | 0.5 | 120.1 | | | |

| | |
|---|---|
| VALVE TYPE | [] CAVITATION [■] FLASHING<br>[] HIGH DP |
| * MAX SHUT OFF PRESS ( $KG/CM^2g$) 7<br>* BODY DESIGN : PRESS ($KG/CM^2g$) \| TEMP (DEG C) 7/VACUUM \| 130<br>* IBR FORM III-C [] REQUIRED [■] NOT REQUIRED | ……<br>……\|……<br>…… |
| TOTAL WEIGHT (VALVE + ACTUATOR + ACCESSORIES) Kg | …… |

NOTES:

1. + DESIGN CV SHALL BE BASED ON SERVICE CONDITIONS INDICATED AT SL. NO. ___4____ AND SHALL BE CHECKED FOR ALL OTHER CONDITIONS.

Tag No. :…DRV-34… Qty.: …1 per Unit… Date Sheet No. PES-145-06-DS1-0
KKS Tag:...LCJ20AA101

## DATA SHEET – A & B

| DATA SHEET – A FOR CONTROL VALVE (WITH PNEUMATIC ACTUATOR) (TO BE FILLED BY PURCHASER) | | | DATA SHEET – B (TO BE FILLED UP BY BIDDER) |
|---|---|---|---|
| GENERAL | PROJECT<br>SERVICE<br>LOCATION<br>DUTY<br>PIPE SIZE (inlet / outlet)<br>PIPE MATERIAL (inlet / outlet) | **SCCL–2x600 MW SINGARENI TPP**<br>LPH-2 NORMAL DRAIN TO LPH-1<br>[■] INDOOR [] OUTDOOR<br>[] ON/OFF [■] MODULATING<br>219.1 x 6.35 \| 323.9 x 9.53<br>SA 106 GR B \| SA 106 GR B | ……<br>……<br>……<br>……<br>……<br>……\|…… |
| BODY | MODEL NO.<br>TYPE OF BODY: GUIDING : NO. OF PORTS<br>BODY SIZE: PORT SIZE: DESIGN CV<br>END CONNECTION & RATING (ANSI)<br>BODY MATERIAL<br><br>PACKING: MATERIAL SINGLE / DOUBLE<br>BONNET TYPE<br>TRIM FORM<br><br>TRIM MATERIAL: SEAT \| PLUG<br>: CAGE \| GUIDE BUSH<br>FLOW<br>OUTLET VELOCITY<br><br>REQUIRED LEAKAGE CLASS<br>NOISE LEVEL (dBA) (spec. 3.1.14)<br>VACUUM SERVICE<br>ANTI CAVITATION TRIM | Bidder to Specify<br>[■] GLOBE [] ANGLE \| [] TOP [■] CAGE \| ONE<br><br>Bidder to Specify<br>[■] BWE [] SWE [] FLANGED<br>[] A216 WCB [■] A217 WC6 [] SS [] A217 CS<br>[] A351 CF8M<br>[] PTFE [■] GRAFOIL [■] DOUBLE [] SINGLE<br>[] STD [] EXTENDED [] FINNED<br>[■] LINEAR [] EQ. PERCENTAGE<br>[] QUICK OPEN (ON/OFF)<br>17-4 PH SS \| 17-4 PH SS<br>17-4 PH SS \| 17-4 PH SS<br>[] BELOW SEAT [] ABOVE SEAT<br>[■] < 7 M/SEC (WATER) \| [] MAC NO. < 1/3(STM)<br>[] II [] III [■] IV [] V [] VI<br>LESS THAN 85 dBA<br>[■] YES [] NO<br>[] YES [■] NO | ……<br>……\|……\|……\|……<br>……\|……\|……<br>……<br>……<br>……<br>……<br>……<br>……\|……<br>……\|……<br>……<br>……<br>……\|……<br>……<br>……<br>……<br>…… |
| PNEUMATIC ACTUATOR | MODEL NO. & SIZE<br>CLOSE AT : OPEN AT (KG/CM$^2$g)<br>TRAVEL TIME FOR<br>OPEN TO CLOSE, CLOSE TO OPEN<br>VALVE POSN. ON SIGNAL AIR FAILURE<br>VALVE POSN. ON SUPPLY AIR FAILURE | Bidder to Specify<br>0.2 \| 1<br>< 10 SEC<br>\|<br>[] TO OPEN [] STAYPUT [■] TO CLOSE<br>[■] STAYPUT | ……\|……<br>……\|……<br>……<br>……<br>……<br>…… |
| ACCESSORIES | POSITIONER (SMART ELECTRO PNEUMATIC)<br>AIR FILTER REGULATOR<br>AIR LOCK RELAY<br>POSITION LIMIT SWITCH<br>POSITION TRANSMITTER<br>SOLENOID VALVE<br>E/P CONVERTER<br>JUNCTION BOX<br>HAND WHEEL (SIDE MOUNTED)<br>LOCAL POSITION INDICATOR | [■] REQUIRED [] NOT REQUIRED<br><br>[■] REQUIRED [] NOT REQUIRED<br>[■] REQUIRED [] NOT REQUIRED<br>[■] REQUIRED [] NOT REQUIRED<br>PART OF POSITIONER<br>[■] REQUIRED [] NOT REQUIRED<br>PART OF POSITIONER<br>[■] REQUIRED [] NOT REQUIRED<br>[■] REQUIRED<br>[■] REQUIRED | ……<br>……<br>……<br>……<br>……<br>……<br>……<br>……<br>……<br>…… |

| | DATA SHEET FOR CONTROL VALVES (WITH PNEUMATIC ACTUATOR) | SPECIFICATION NO.: PE-TS-381-145-I004 | |
|---|---|---|---|
| | | VOLUME II-B | |
| | | SECTION D | |
| | | REV. NO. 00 | DATE : 14/03/2013 |
| | | SHEET 49 OF 62 | |

Tag No. :…DRV-34… Qty.: …1 per Unit… Date Sheet No. PES-145-06-DS1-0
KKS Tag:...LCJ20AA101

## DATA SHEET – A & B

| DATA SHEET – A FOR CONTROL VALVE (WITH PNEUMATIC ACTUATOR) (TO BE FILLED BY PURCHASER) | | | DATA SHEET – B (TO BE FILLED UP BY BIDDER) |
|---|---|---|---|
| PERFORMANCE OF VALVE | LINEARITY | ± 2% | …… |
| | HYSTERISIS | ± 1% | …… |
| | SENSITIVITY | ± 0.5% | …… |
| | ACCURACY (OVERALL) | ± 2% | …… |

| SERVICE CONDITION | SL. No. + | LOAD | FLOW (T/HR) | INLET PR. $KG/CM^2(A)$ | OUTLET PR. $KG/CM^2(A)$ | TEMP DEG (C) | CALC ULATED CV | % VLV LIFT | VLV O/L VELOCITY |
|---|---|---|---|---|---|---|---|---|---|
| | 1. | 40% MCR | 45.6 | 0.4 | 0.32 | 61.3 | | | |
| | 2. | 60% MCR | 67.4 | 0.55 | 0.40 | 67.8 | | | |
| | 3. | 100% MCR | 124.3 | 0.72 | 0.55 | 75.6 | | | |
| | 4. | VWO | 131.1 | 0.74 | 0.55 | 76.5 | | | |
| | 5. | BOTH STRINGS HPH OUT OF SERVICE | 139.2 | 0.75 | 0.6 | 77.6 | | | |
| | VALVE TYPE | | | | | | [] CAVITATION [■] FLASHING<br>[] HIGH DP | | |
| | * MAX SHUT OFF PRESS ( $KG/CM^2g$)<br>* BODY DESIGN : PRESS ($KG/CM^2g$) \| TEMP (DEG C)<br>* IBR FORM III-C | | | | 7<br>7/VACUUM \| 85<br>[] REQUIRED [■] NOT REQUIRED | | …… | | |
| | TOTAL WEIGHT (VALVE + ACTUATOR + ACCESSORIES) Kg | | | | | | …… | | |

NOTES:

1. + DESIGN CV SHALL BE BASED ON SERVICE CONDITIONS INDICATED AT SL. NO. ___4____ AND SHALL BE CHECKED FOR ALL OTHER CONDITIONS.

Tag No. :…DRV-37… Qty.: …1 per Unit… Date Sheet No. PES-145-06-DS1-0
KKS Tag:...LCJ21AA101

## DATA SHEET – A & B

| DATA SHEET – A FOR CONTROL VALVE (WITH PNEUMATIC ACTUATOR) (TO BE FILLED BY PURCHASER) | | | DATA SHEET – B (TO BE FILLED UP BY BIDDER) |
|---|---|---|---|
| GENERAL | PROJECT<br>SERVICE<br>LOCATION<br>DUTY<br>PIPE SIZE (inlet / outlet)<br>PIPE MATERIAL (inlet / outlet) | **SCCL–2x600 MW SINGARENI TPP**<br>LPH-2 ALT. DRAIN TO F/T-B<br>[■] INDOOR [] OUTDOOR<br>[] ON/OFF [■] MODULATING<br>219.1 x 6.35 \| 273 x 9.27<br>SA 106 GR B \| SA 106 GR B | ……<br>……<br>……<br>……<br>……<br>……\|…… |
| BODY | MODEL NO.<br>TYPE OF BODY: GUIDING : NO. OF PORTS<br>BODY SIZE: PORT SIZE: DESIGN CV<br>END CONNECTION & RATING (ANSI)<br>BODY MATERIAL<br><br>PACKING: MATERIAL SINGLE / DOUBLE<br>BONNET TYPE<br>TRIM FORM<br><br>TRIM MATERIAL: SEAT \| PLUG<br>: CAGE \| GUIDE BUSH<br>FLOW<br>OUTLET VELOCITY<br><br>REQUIRED LEAKAGE CLASS<br>NOISE LEVEL (dBA) (spec. 3.1.14)<br>VACUUM SERVICE<br>ANTI CAVITATION TRIM | Bidder to Specify<br>[■] GLOBE [] ANGLE \| [] TOP [■] CAGE \| ONE<br><br>Bidder to Specify<br>[■] BWE [] SWE [] FLANGED<br>[] A216 WCB [■] A217 WC9 [] SS [] A217 CS<br>[] A351 CF8M<br>[] PTFE [■] GRAFOIL [■] DOUBLE [] SINGLE<br>[] STD [] EXTENDED [] FINNED<br>[■] LINEAR [] EQ. PERCENTAGE<br>[] QUICK OPEN (ON/OFF)<br>440C \| 440C<br>440C \| 440C<br>[] BELOW SEAT [] ABOVE SEAT<br>[■] < 7 M/SEC (WATER) \| [] MAC NO. < 1/3(STM)<br>[] II [] III [] IV [■] V [] VI<br>LESS THAN 85 dBA<br>[■] YES [] NO<br>[■] YES [] NO | ……<br>……\|……\|……\|……<br>……\|……\|……<br>……<br>……<br>……<br>……<br>……<br>……\|……<br>……\|……<br>……<br>……<br>……\|……<br>……<br>……<br>……<br>…… |
| PNEUMATIC ACTUATOR | MODEL NO. & SIZE<br>CLOSE AT : OPEN AT (KG/CM$^2$g)<br>TRAVEL TIME FOR<br>OPEN TO CLOSE, CLOSE TO OPEN<br>VALVE POSN. ON SIGNAL AIR FAILURE<br>VALVE POSN. ON SUPPLY AIR FAILURE | Bidder to Specify<br>1 \| 0.2<br>< 10 SEC<br>\|<br>[■] TO OPEN [] STAYPUT [] TO CLOSE<br>[■] STAYPUT | ……\|……<br>……\|……<br>……<br>……<br>……<br>…… |
| ACCESSORIES | POSITIONER (SMART ELECTRO PNEUMATIC)<br>AIR FILTER REGULATOR<br>AIR LOCK RELAY<br>POSITION LIMIT SWITCH<br>POSITION TRANSMITTER<br>SOLENOID VALVE<br>E/P CONVERTER<br>JUNCTION BOX<br>HAND WHEEL (SIDE MOUNTED)<br>LOCAL POSITION INDICATOR | [■] REQUIRED [] NOT REQUIRED<br><br>[■] REQUIRED [] NOT REQUIRED<br>[■] REQUIRED [] NOT REQUIRED<br>[■] REQUIRED [] NOT REQUIRED<br>PART OF POSITIONER<br>[■] REQUIRED [] NOT REQUIRED<br>PART OF POSITIONER<br>[■] REQUIRED [] NOT REQUIRED<br>[■] REQUIRED<br>[■] REQUIRED | ……<br>……<br>……<br>……<br>……<br>……<br>……<br>……<br>……<br>…… |

| | DATA SHEET FOR CONTROL VALVES (WITH PNEUMATIC ACTUATOR) | SPECIFICATION NO.: PE-TS-381-145-I004 | |
|---|---|---|---|
| | | VOLUME II-B | |
| | | SECTION D | |
| | | REV. NO. 00 | DATE : 14/03/2013 |
| | | SHEET 51 OF 62 | |

Tag No. :…DRV-37… Qty.: …1 per Unit… Date Sheet No. PES-145-06-DS1-0
KKS Tag:...LCJ21AA101

## DATA SHEET – A & B

| DATA SHEET – A FOR CONTROL VALVE (WITH PNEUMATIC ACTUATOR) (TO BE FILLED BY PURCHASER) | | | DATA SHEET – B (TO BE FILLED UP BY BIDDER) |
|---|---|---|---|
| PERFORMANCE OF VALVE | LINEARITY | ± 2% | …… |
| | HYSTERISIS | ± 1% | …… |
| | SENSITIVITY | ± 0.5% | …… |
| | ACCURACY (OVERALL) | ± 2% | …… |

| | SL. No. + | LOAD | FLOW (T/HR) | INLET PR. $KG/CM^2(A)$ | OUTLET PR. $KG/CM^2(A)$ | TEMP DEG (C) | CALC ULATED CV | % VLV LIFT | VLV O/L VELOCITY |
|---|---|---|---|---|---|---|---|---|---|
| SERVICE CONDITION | 1. | 40% MCR | 45.6 | 0.85 | 0.3 | 77.7 | | | |
| | 2. | 60% MCR | 67.4 | 1.03 | 0.3 | 85.5 | | | |
| | 3. | 100% MCR | 124.3 | 1.1 | 0.3 | 96.8 | | | |
| | 4. | VWO | 131.1 | 1.2 | 0.3 | 97.9 | | | |
| | 5. | LPH-1 OUT | 170.1 | 0.9 | 0.5 | 90.5 | | | |

| | | |
|---|---|---|
| | VALVE TYPE | [■] CAVITATION [■] FLASHING<br>[] HIGH DP |
| | * MAX SHUT OFF PRESS ( $KG/CM^2g$) 7<br>* BODY DESIGN : PRESS ($KG/CM^2g$) \| TEMP (DEG C) 7/VACUUM \| 110<br>* IBR FORM III-C [] REQUIRED [■] NOT REQUIRED | ……<br>……\|……<br>…… |
| | TOTAL WEIGHT (VALVE + ACTUATOR + ACCESSORIES) Kg | …… |

NOTES:

1. + DESIGN CV SHALL BE BASED ON SERVICE CONDITIONS INDICATED AT SL. NO. ___4____ AND SHALL BE CHECKED FOR ALL OTHER CONDITIONS.

| | DATA SHEET FOR CONTROL VALVES (WITH PNEUMATIC ACTUATOR) | SPECIFICATION NO.: PE-TS-381-145-I004 | |
|---|---|---|---|
| | | VOLUME II-B | |
| | | SECTION D | |
| | | REV. NO. 00 | DATE : 14/03/2013 |
| | | SHEET 52 OF 62 | |

Tag No. :…DRV-48… Qty.: …1 per Unit… Date Sheet No. PES-145-06-DS1-0
KKS Tag:...LAA02AA101

## DATA SHEET – A & B

| DATA SHEET – A FOR CONTROL VALVE (WITH PNEUMATIC ACTUATOR) (TO BE FILLED BY PURCHASER) | | | DATA SHEET – B (TO BE FILLED UP BY BIDDER) |
|---|---|---|---|
| GENERAL | PROJECT<br>SERVICE<br>LOCATION<br>DUTY<br>PIPE SIZE (inlet / outlet)<br>PIPE MATERIAL (inlet / outlet) | **SCCL–2x600 MW SINGARENI TPP**<br>DEAERATOR OVERFLOW TO F/T-A<br>[■] INDOOR [] OUTDOOR<br>[■] ON/OFF [] MODULATING<br>168.3 x 7.11 \| 219.1 x 6.35<br>SA 106 GR B \| SA 106 GR B | ……<br>……<br>……<br>……<br>……<br>……\|…… |
| BODY | MODEL NO.<br>TYPE OF BODY: GUIDING : NO. OF PORTS<br>BODY SIZE: PORT SIZE: DESIGN CV<br>END CONNECTION & RATING (ANSI)<br>BODY MATERIAL<br><br>PACKING: MATERIAL SINGLE / DOUBLE<br>BONNET TYPE<br>TRIM FORM<br><br>TRIM MATERIAL: SEAT \| PLUG<br>: CAGE \| GUIDE BUSH<br>FLOW<br>OUTLET VELOCITY<br><br>REQUIRED LEAKAGE CLASS<br>NOISE LEVEL (dBA) (spec. 3.1.14)<br>VACUUM SERVICE<br>ANTI CAVITATION TRIM | Bidder to Specify<br>[■] GLOBE [] ANGLE \| [] TOP [■] CAGE \| ONE<br><br>Bidder to Specify<br>[■] BWE [] SWE [] FLANGED<br>[] A216 WCB [■] A217 WC9 [] SS [] A217 CS<br>[] A351 CF8M<br>[] PTFE [■] GRAFOIL [■] DOUBLE [] SINGLE<br>[] STD [] EXTENDED [] FINNED<br>[] LINEAR [] EQ. PERCENTAGE<br>[■] QUICK OPEN (ON/OFF)<br>440C \| 440C<br>440C \| 440C<br>[] BELOW SEAT [] ABOVE SEAT<br>[■] < 7 M/SEC (WATER) \| [] MAC NO. < 1/3(STM)<br>[] II [] III [] IV [■] V [] VI<br>LESS THAN 85 dBA<br>[■] YES [] NO<br>[] YES [■] NO | ……<br>……\|……\|……\|……<br>……\|……\|……<br>……<br>……<br>……<br>……<br>……<br>……\|……<br>……\|……<br>……<br>……<br>……\|……<br>……<br>……<br>……<br>…… |
| PNEUMATIC ACTUATOR | MODEL NO. & SIZE<br>CLOSE AT : OPEN AT (KG/CM$^2$g)<br>TRAVEL TIME FOR<br>OPEN TO CLOSE, CLOSE TO OPEN<br>VALVE POSN. ON SIGNAL AIR FAILURE<br>VALVE POSN. ON SUPPLY AIR FAILURE | Bidder to Specify<br>1 \| 0.2<br>< 10 SEC<br>\|<br>[■] TO OPEN [] STAYPUT [] TO CLOSE<br>[■] STAYPUT | ……\|……<br>……\|……<br>……<br>……<br>……<br>…… |
| ACCESSORIES | POSITIONER (SMART ELECTRO PNEUMATIC)<br>AIR FILTER REGULATOR<br>AIR LOCK RELAY<br>POSITION LIMIT SWITCH<br>POSITION TRANSMITTER<br>SOLENOID VALVE<br>E/P CONVERTER<br>JUNCTION BOX<br>HAND WHEEL (SIDE MOUNTED)<br>LOCAL POSITION INDICATOR | [] REQUIRED [■] NOT REQUIRED<br><br>[■] REQUIRED [] NOT REQUIRED<br>[■] REQUIRED [] NOT REQUIRED<br>[■] REQUIRED [] NOT REQUIRED<br>[] REQUIRED [■] NOT REQUIRED<br>[■] REQUIRED [] NOT REQUIRED<br>[] REQUIRED [■] NOT REQUIRED<br>[■] REQUIRED [] NOT REQUIRED<br>[■] REQUIRED<br>[] REQUIRED [■] NOT REQUIRED | ……<br>……<br>……<br>……<br>……<br>……<br>……<br>……<br>……<br>……<br>…… |

| | DATA SHEET FOR CONTROL VALVES (WITH PNEUMATIC ACTUATOR) | SPECIFICATION NO.: PE-TS-381-145-I004 | |
|---|---|---|---|
| | | VOLUME II-B | |
| | | SECTION D | |
| | | REV. NO. 00 | DATE : 14/03/2013 |
| | | SHEET 53 OF 62 | |

Tag No. :…DRV-48… Qty.: …1 per Unit… Date Sheet No. PES-145-06-DS1-0
KKS Tag:...LAA02AA101

## DATA SHEET – A & B

| DATA SHEET – A FOR CONTROL VALVE (WITH PNEUMATIC ACTUATOR) (TO BE FILLED BY PURCHASER) | | | DATA SHEET – B (TO BE FILLED UP BY BIDDER) |
|---|---|---|---|
| PERFORMANCE OF VALVE | LINEARITY | ± 2% | …… |
| | HYSTERISIS | ± 1% | …… |
| | SENSITIVITY | ± 0.5% | …… |
| | ACCURACY (OVERALL) | ± 2% | …… |

SERVICE CONDITION

| SL. No. + | LOAD | FLOW (T/HR) | INLET PR. KG/CM$^2$(A) | OUTLET PR. KG/CM$^2$(A) | TEMP DEG (C) | CALC ULATED CV | % VLV LIFT | VLV O/L VELOCITY |
|---|---|---|---|---|---|---|---|---|
| 1. | MAX.-1 10% BMCR | 200 | 9.75 | 0.3 | 164.6 | | | |
| 2. | MAX.-2 10% BMCR | 200 | 6.25 | 0.5 | 138.2 | | | |
| | | | | | | | | |
| | | | | | | | | |
| | | | | | | | | |

| | |
|---|---|
| VALVE TYPE | [] CAVITATION [■] FLASHING<br>[] HIGH DP |
| * MAX SHUT OFF PRESS ( KG/CM$^2$g) 11<br>* BODY DESIGN : PRESS (KG/CM$^2$g) \| TEMP (DEG C) 11/VACUUM \| 175<br>* IBR FORM III-C [] REQUIRED [■] NOT REQUIRED | ……<br>……\|……<br>…… |
| TOTAL WEIGHT (VALVE + ACTUATOR + ACCESSORIES) Kg | …… |

NOTES:

1. + DESIGN CV SHALL BE BASED ON SERVICE CONDITIONS INDICATED AT SL. NO. ___1____ AND SHALL BE CHECKED FOR ALL OTHER CONDITIONS.

Tag No. :…DMV-19… Qty.: …1 per Unit… Date Sheet No. PES-145-06-DS1-0
KKS Tag:...LCR41AA101

## DATA SHEET – A & B

| DATA SHEET – A FOR CONTROL VALVE (WITH PNEUMATIC ACTUATOR) (TO BE FILLED BY PURCHASER) | | | DATA SHEET – B (TO BE FILLED UP BY BIDDER) |
|---|---|---|---|
| GENERAL | PROJECT<br>SERVICE<br>LOCATION<br>DUTY<br>PIPE SIZE (inlet / outlet)<br>PIPE MATERIAL (inlet / outlet) | **SCCL–2x600 MW SINGARENI TPP**<br>DM NORMAL MU TO HOTWELL<br>[■] INDOOR [] OUTDOOR<br>[] ON/OFF [■] MODULATING<br>114.3 x 3.05 \| 114.3 x 3.05<br>SA 312 TP 304 (ERW ) \| SA 312 TP 304 (ERW ) | ……<br>……<br>……<br>……<br>……<br>……\|…… |
| BODY | MODEL NO.<br>TYPE OF BODY: GUIDING : NO. OF PORTS<br>BODY SIZE: PORT SIZE: DESIGN CV<br>END CONNECTION & RATING (ANSI)<br>BODY MATERIAL<br><br>PACKING: MATERIAL SINGLE / DOUBLE<br>BONNET TYPE<br>TRIM FORM<br><br>TRIM MATERIAL: SEAT \| PLUG<br>: CAGE \| GUIDE BUSH<br>FLOW<br>OUTLET VELOCITY<br><br>REQUIRED LEAKAGE CLASS<br>NOISE LEVEL (dBA) (spec. 3.1.14)<br>VACUUM SERVICE<br>ANTI CAVITATION TRIM | Bidder to Specify<br>[■] GLOBE [] ANGLE \| [] TOP [■] CAGE \| ONE<br><br>Bidder to Specify<br>[■] BWE [] SWE [] FLANGED<br>[] A216 WCB [] A217 WC6 [] SS [] A217 CS<br>[■] A351 CF8M<br>[] PTFE [■] GRAFOIL [■] DOUBLE [] SINGLE<br>[] STD [] EXTENDED [] FINNED<br>[] LINEAR [■] EQ. PERCENTAGE<br>[] QUICK OPEN (ON/OFF)<br>SS 316 STELLITED \| SS 316 STELLITED<br>SS 316 STELLITED \| SS 316 STELLITED<br>[] BELOW SEAT [] ABOVE SEAT<br>[■] < 7 M/SEC (WATER) \| [] MAC NO. < 1/3(STM)<br>[] II [] III [] IV [■] V [] VI<br>LESS THAN 85 dBA<br>[■] YES [] NO<br>[■] YES [] NO | ……<br>……\|……\|……\|……<br>……\|……\|……<br>……<br>……<br>……<br>……<br>……<br>……\|……<br>……\|……<br>……<br>……<br>……\|……<br>……<br>……<br>……<br>…… |
| PNEUMATIC ACTUATOR | MODEL NO. & SIZE<br>CLOSE AT : OPEN AT (KG/CM$^2$g)<br>TRAVEL TIME FOR<br>OPEN TO CLOSE, CLOSE TO OPEN<br>VALVE POSN. ON SIGNAL AIR FAILURE<br>VALVE POSN. ON SUPPLY AIR FAILURE | Bidder to Specify<br>1 \| 0.2<br>< 10 SEC<br>\|<br>[■] TO OPEN [] STAYPUT [] TO CLOSE<br>[■] STAYPUT | ……\|……<br>……\|……<br>……<br>……<br>……<br>…… |
| ACCESSORIES | POSITIONER (SMART ELECTRO PNEUMATIC)<br>AIR FILTER REGULATOR<br>AIR LOCK RELAY<br>POSITION LIMIT SWITCH<br>POSITION TRANSMITTER<br>SOLENOID VALVE<br>E/P CONVERTER<br>JUNCTION BOX<br>HAND WHEEL (SIDE MOUNTED)<br>LOCAL POSITION INDICATOR | [■] REQUIRED [] NOT REQUIRED<br><br>[■] REQUIRED [] NOT REQUIRED<br>[■] REQUIRED [] NOT REQUIRED<br>[■] REQUIRED [] NOT REQUIRED<br>PART OF POSITIONER<br>[■] REQUIRED [] NOT REQUIRED<br>PART OF POSITIONER<br>[■] REQUIRED [] NOT REQUIRED<br>[■] REQUIRED<br>[■] REQUIRED | ……<br>……<br>……<br>……<br>……<br>……<br>……<br>……<br>……<br>…… |

| | DATA SHEET FOR CONTROL VALVES (WITH PNEUMATIC ACTUATOR) | SPECIFICATION NO.: PE-TS-381-145-I004 | |
|---|---|---|---|
| | | VOLUME II-B | |
| | | SECTION D | |
| | | REV. NO. 00 | DATE : 14/03/2013 |
| | | SHEET 55 OF 62 | |

Tag No. :…DMV-19… Qty.: …1 per Unit… Date Sheet No. PES-145-06-DS1-0
KKS Tag:...LCR41AA101

## DATA SHEET – A & B

| DATA SHEET – A FOR CONTROL VALVE (WITH PNEUMATIC ACTUATOR) (TO BE FILLED BY PURCHASER) | | | DATA SHEET – B (TO BE FILLED UP BY BIDDER) |
|---|---|---|---|
| PERFORMANCE OF VALVE | LINEARITY | ± 2% | …… |
| | HYSTERISIS | ± 1% | …… |
| | SENSITIVITY | ± 0.5% | …… |
| | ACCURACY (OVERALL) | ± 2% | …… |

| SERVICE CONDITION | SL. No. + | LOAD | FLOW (T/HR) | INLET PR. $KG/CM^2(A)$ | OUTLET PR. $KG/CM^2(A)$ | TEMP DEG (C) | CALC ULATED CV | % VLV LIFT | VLV O/L VELOCITY |
|---|---|---|---|---|---|---|---|---|---|
| | 1. | MIN. (1% MU) | 20 | 6.0 | 0.5 TO 0.7 | 33 | | | |
| | 2. | NORMAL (3% MU) | 60 | 5.5 | 0.55 TO 0.75 | 33 | | | |
| | 3. | MAX. (5% MU) | 100 | 5.0 | 0.6 TO 0.8 | 33 | | | |
| | 4. | NORMAL | 60 | 5.5 | 1.6 | 33 | | | |
| | | | | | | | | | |

| | |
|---|---|
| VALVE TYPE | [■] CAVITATION [] FLASHING<br>[] HIGH DP |
| * MAX SHUT OFF PRESS ( $KG/CM^2g$) 10<br>* BODY DESIGN : PRESS ($KG/CM^2g$) \| TEMP (DEG C) 10/VACUUM \| 50<br>* IBR FORM III-C [] REQUIRED [■] NOT REQUIRED | ……<br>……\|……<br>…… |
| TOTAL WEIGHT (VALVE + ACTUATOR + ACCESSORIES) Kg | …… |

NOTES:

1. + DESIGN CV SHALL BE BASED ON SERVICE CONDITIONS INDICATED AT SL. NO. ___2____ AND SHALL BE CHECKED FOR ALL OTHER CONDITIONS.

Tag No. :…DMV-23… Qty.: …1 per Unit… Date Sheet No. PES-145-06-DS1-0
KKS Tag:...LCR81AA101

## DATA SHEET – A & B

| DATA SHEET – A FOR CONTROL VALVE (WITH PNEUMATIC ACTUATOR) (TO BE FILLED BY PURCHASER) | | | DATA SHEET – B (TO BE FILLED UP BY BIDDER) |
|---|---|---|---|
| GENERAL | PROJECT<br>SERVICE<br>LOCATION<br>DUTY<br>PIPE SIZE (inlet / outlet)<br>PIPE MATERIAL (inlet / outlet) | **SCCL–2x600 MW SINGARENI TPP**<br>DM EMERGENCY MU TO HOTWELL<br>[■] INDOOR [] OUTDOOR<br>[] ON/OFF [■] MODULATING<br>219.1 x 3.76 \| 219.1 x 3.76<br>SA 312 TP 304 (ERW ) \| SA 312 TP 304 (ERW ) | ……<br>……<br>……<br>……<br>……<br>……\|…… |
| BODY | MODEL NO.<br>TYPE OF BODY: GUIDING : NO. OF PORTS<br>BODY SIZE: PORT SIZE: DESIGN CV<br>END CONNECTION & RATING (ANSI)<br>BODY MATERIAL<br><br>PACKING: MATERIAL SINGLE / DOUBLE<br>BONNET TYPE<br>TRIM FORM<br><br>TRIM MATERIAL: SEAT \| PLUG<br>: CAGE \| GUIDE BUSH<br>FLOW<br>OUTLET VELOCITY<br><br>REQUIRED LEAKAGE CLASS<br>NOISE LEVEL (dBA) (spec. 3.1.14)<br>VACUUM SERVICE<br>ANTI CAVITATION TRIM | Bidder to Specify<br>[■] GLOBE [] ANGLE \| [] TOP [■] CAGE \| ONE<br><br>Bidder to Specify<br>[■] BWE [] SWE [] FLANGED<br>[] A216 WCB [] A217 WC6 [] SS [] A217 CS<br>[■] A351 CF8M<br>[] PTFE [■] GRAFOIL [■] DOUBLE [] SINGLE<br>[] STD [] EXTENDED [] FINNED<br>[] LINEAR [■] EQ. PERCENTAGE<br>[] QUICK OPEN (ON/OFF)<br>SS 316 STELLITED \| SS 316 STELLITED<br>SS 316 STELLITED \| SS 316 STELLITED<br>[] BELOW SEAT [] ABOVE SEAT<br>[■] < 7 M/SEC (WATER) \| [] MAC NO. < 1/3(STM)<br>[] II [] III [] IV [■] V [] VI<br>LESS THAN 85 dBA<br>[■] YES [] NO<br>[■] YES [] NO | ……<br>……\|……\|……\|……<br>……\|……\|……<br>……<br>……<br>……<br>……<br>……<br>……\|……<br>……\|……<br>……<br>……<br>……\|……<br>……<br>……<br>……<br>…… |
| PNEUMATIC ACTUATOR | MODEL NO. & SIZE<br>CLOSE AT : OPEN AT (KG/CM$^2$g)<br>TRAVEL TIME FOR<br>OPEN TO CLOSE, CLOSE TO OPEN<br>VALVE POSN. ON SIGNAL AIR FAILURE<br>VALVE POSN. ON SUPPLY AIR FAILURE | Bidder to Specify<br>0.2 \| 1<br>< 10 SEC<br>\|<br>[] TO OPEN [] STAYPUT [■] TO CLOSE<br>[■] STAYPUT | ……\|……<br>……\|……<br>……<br>……<br>……<br>…… |
| ACCESSORIES | POSITIONER (SMART ELECTRO PNEUMATIC)<br>AIR FILTER REGULATOR<br>AIR LOCK RELAY<br>POSITION LIMIT SWITCH<br>POSITION TRANSMITTER<br>SOLENOID VALVE<br>E/P CONVERTER<br>JUNCTION BOX<br>HAND WHEEL (SIDE MOUNTED)<br>LOCAL POSITION INDICATOR | [■] REQUIRED [] NOT REQUIRED<br><br>[■] REQUIRED [] NOT REQUIRED<br>[■] REQUIRED [] NOT REQUIRED<br>[■] REQUIRED [] NOT REQUIRED<br>PART OF POSITIONER<br>[■] REQUIRED [] NOT REQUIRED<br>PART OF POSITIONER<br>[■] REQUIRED [] NOT REQUIRED<br>[■] REQUIRED<br>[■] REQUIRED | ……<br>……<br>……<br>……<br>……<br>……<br>……<br>……<br>……<br>…… |

| | DATA SHEET FOR CONTROL VALVES (WITH PNEUMATIC ACTUATOR) | SPECIFICATION NO.: PE-TS-381-145-I004 | |
|---|---|---|---|
| | | VOLUME II-B | |
| | | SECTION D | |
| | | REV. NO. 00 | DATE : 14/03/2013 |
| | | SHEET 57 OF 62 | |

Tag No. :…DMV-23… Qty.: …1 per Unit… Date Sheet No. PES-145-06-DS1-0
KKS Tag:...LCR81AA101

## DATA SHEET – A & B

| DATA SHEET – A FOR CONTROL VALVE (WITH PNEUMATIC ACTUATOR) (TO BE FILLED BY PURCHASER) | | | DATA SHEET – B (TO BE FILLED UP BY BIDDER) |
|---|---|---|---|
| PERFORMANCE OF VALVE | LINEARITY<br>HYSTERISIS<br>SENSITIVITY<br>ACCURACY (OVERALL) | ± 2%<br>± 1%<br>± 0.5%<br>± 2% | ……<br>……<br>……<br>…… |

SERVICE CONDITION

| SL. No. + | LOAD | FLOW (T/HR) | INLET PR. $KG/CM^2(A)$ | OUTLET PR. $KG/CM^2(A)$ | TEMP DEG (C) | CALC ULATED CV | % VLV LIFT | VLV O/L VELOCITY |
|---|---|---|---|---|---|---|---|---|
| 1. | MIN. (5% MU) | 100 | 5.0 | 0.6 TO 0.8 | 33 | | | |
| 2. | NORMAL (10% MU) | 200 | 4.5 | 0.5 TO 0.7 | 33 | | | |
| 3. | CT PUMP DESIGN FLOW | 300 | 4.0 | 1.5 | 33 | | | |
| | | | | | | | | |
| | | | | | | | | |

| | |
|---|---|
| VALVE TYPE | [■] CAVITATION [] FLASHING<br>[] HIGH DP |
| * MAX SHUT OFF PRESS ( $KG/CM^2g$) 10<br>* BODY DESIGN : PRESS ($KG/CM^2g$) \| TEMP (DEG C) 10/ VACUUM \| 50<br>* IBR FORM III-C [] REQUIRED [■] NOT REQUIRED | ……<br>……\|……<br>…… |
| TOTAL WEIGHT (VALVE + ACTUATOR + ACCESSORIES) Kg | …… |

NOTES:

1. + DESIGN CV SHALL BE BASED ON SERVICE CONDITIONS INDICATED AT SL. NO. ___2____ AND SHALL BE CHECKED FOR ALL OTHER CONDITIONS.

Tag No.: ECW20 Qty.: ONE (1) NO. PER UNIT Date Sheet No. PES-145-06-DS1-0

## DATA SHEET – A & B

| DATA SHEET – A FOR CONTROL VALVE (WITH PNEUMATIC ACTUATOR) (TO BE FILLED BY PURCHASER) | | | DATA SHEET – B (TO BE FILLED UP BY BIDDER) |
|---|---|---|---|
| GENERAL | PROJECT<br>SERVICE<br>LOCATION<br>DUTY<br>PIPE SIZE (inlet / outlet)<br>PIPE MATERIAL (inlet / outlet) | 2X600 MW SCCL, ADILABAD TPP<br>TG-ECW SYSTEM<br>[•] INDOOR [] OUTDOOR<br>[] ON/OFF [•] MODULATING<br>450 NB (457.2x6.0) \| 450 NB (457.2 x 6)<br>CARBON STEEL AS PER IS 2062/ SAME | .....<br>.....<br>.....<br>.....<br>.....<br>.....\|..... |
| BODY | MODEL NO.<br>TYPE OF BODY: GUIDING: NO. OF PORTS<br>BODY SIZE: PORT SIZE: DESIGN CV<br>END CONNECTION & RATING (ANSI)<br>BODY MATERIAL<br><br>PACKING: MATERIAL SINGLE / DOUBLE<br>BONNET TYPE<br>TRIM FORM<br><br>TRIM MATERIAL: SEAT \| PLUG<br>: CAGE \| GUIDE BUSH<br><br>FLOW<br>OUTLET VELOCITY<br>REQUIRED LEAKAGE CLASS<br>NOISE LEVEL (dBA) (spec. 3.1.14)<br>VACUUM SERVICE<br>ANTI CAVITATION TRIM | Bidder to specify<br>[•] GLOBE [] ANGLE \| [] TOP [•] CAGE \| ONE<br>Bidder to specify<br>[•] BWE [] SWE [] FLANGED<br>[•] A216 WCB [] A217 WC6 [] SS [] A217 CS<br>[] A351 CF8M<br>[] PTFE [•] GRAFOIL [] DOUBLE [•] SINGLE<br>[] STD [] EXTENDED [] FINNED<br>[] LINEAR [•] EQ. PERCENTAGE<br>[] QUICK OPEN (ON/OFF)<br>SS 316 STELLITED \| SS 316 STELLITED<br>17-4 PH SS \| SS 316 STELLITED<br><br>[] BELOW SEAT [] ABOVE SEAT<br>[•] < 7 M/SEC (WATER) \| [] MAC NO < 1/3 (STM)<br>[] II [] III [•] IV [] V [] VI<br>LESS THAN 85 dBA<br>[] YES [•] NO<br>[] YES [•] NO | .....<br>.....\|.....\|.....\|.....<br>.....\|.....\|.....<br>.....<br>.....<br>.....<br>.....<br>.....<br>.....<br>.....\|.....<br>.....\|.....<br>.....<br>.....<br>.....\|.....<br>.....<br>.....<br>.....<br>..... |
| PNEUMATIC ACTUATOR | MODEL NO. & SIZE<br>CLOSE AT : OPEN AT (KG/CM2g)<br>TRAVEL TIME FOR<br>OPEN TO CLOSE, CLOSE TO OPEN<br>VALVE POSN. ON SIGNAL AIR FAILURE<br>VALVE POSN. ON SUPPLY AIR FAILURE | Bidder to specify<br>0.2 \| 1<br>< 10 SEC<br>\|<br>[] TO OPEN [] STAYPUT [•] TO CLOSE<br>[•] STAYPUT | .....\|.....<br>.....\|.....<br>.....<br>.....<br>.....<br>..... |
| ACCESSORIES | POSITIONER(SMART ELECTRO PNEUMATIC)<br>AIR FILTER REGULATOR<br>AIR LOCK RELAY<br>POSITION LIMIT SWITCH<br>POSITION TRANSMITTER<br>SOLENOID VALVE<br>E/P CONVERTER<br>JUNCTION BOX<br>HAND WHEEL (SIDE MOUNTED)<br>LOCAL POSITION INDICATOR | [•] REQUIRED [] NOT REQUIRED<br><br>[•] REQUIRED [] NOT REQUIRED<br>[•] REQUIRED [] NOT REQUIRED<br>[•] REQUIRED [] NOT REQUIRED<br>PART OF POSITIONER<br>[•] REQUIRED [] NOT REQUIRED<br>PART OF POSITIONER<br>[•] REQUIRED [] NOT REQUIRED<br>[•] REQUIRED<br>[•] REQUIRED | .....<br>.....<br>.....<br>.....<br>.....<br>.....<br>.....<br>.....<br>.....<br>.....<br>.....<br>..... |

Tag No.: ECW20 Qty.: ONE (1) NO. PER UNIT

Date Sheet No. PES-145-06-DS1-0

## DATA SHEET – A & B

| DATA SHEET – A FOR CONTROL VALVE (WITH PNEUMATIC ACTUATOR) (TO BE FILLED BY PURCHASER) | | | DATA SHEET – B (TO BE FILLED UP BY BIDDER) |
|---|---|---|---|
| PERFORMANCE OF VALVE | LINEARITY | ± 2% | ..... |
| | HYSTERISIS | ± 1% | ..... |
| | SENSITIVITY | ± 0.5% | ..... |
| | ACCURACY (OVERALL) | ± 2% | ..... |

SERVICE CONDITION

| SL. No. + | LOAD | FLOW (T/HR) | INLET PR. KG/CM2(A) | OUTLET PR. KG/CM2(A) | TEMP DEG (C) | CALC ULATED CV | % VLV LIFT | VLV O/L VELOCITY |
|---|---|---|---|---|---|---|---|---|
| 1 | 100 % | 1050 | 7.0 | 3.0 | 38 | | | |
| 2 | 75 % | 787.5 | 7.0 | 3.0 | 38 | | | |
| 3 | 50 % | 525 | 7.0 | 3.0 | 38 | | | |
| 4 | 25 % | 262.5 | 7.0 | 3.0 | 38 | | | |
| 5 | | | | | | | | |

| | |
|---|---|
| VALVE TYPE | [] CAVITATION [] FLASHING<br>[] HIGH DP |
| MAX SHUT OFF PRESS ( KG/CM2g) 10<br>BODY DESIGN : PRESS (KG/CM2g) \| TEMP (DEG C) 10 \| 60<br>IBR FORM III-C [] REQUIRED [•] NOT REQUIRED | .....<br>.....\|.....<br>..... |
| TOTAL WEIGHT (VALVE + ACTUATOR + ACCESSORIES) Kg | ..... |

Tag No.: ECW83 Qty.: ONE (1) NO. PER UNIT Date Sheet No. PES-145-06-DS1-0

## DATA SHEET – A & B

| DATA SHEET – A FOR CONTROL VALVE (WITH PNEUMATIC ACTUATOR) (TO BE FILLED BY PURCHASER) | | | DATA SHEET – B (TO BE FILLED UP BY BIDDER) |
|---|---|---|---|
| GENERAL | PROJECT<br>SERVICE<br>LOCATION<br>DUTY<br>PIPE SIZE (inlet / outlet)<br>PIPE MATERIAL (inlet / outlet) | 2X600 MW SCCL, ADILABAD TPP<br>SG-ECW SYSTEM<br>[•] INDOOR [] OUTDOOR<br>[] ON/OFF [•] MODULATING<br>300 NB (323.9x6.0) \| 300 NB (323.9 x 6)<br>CARBON STEEL AS PER IS 2062/ SAME | .....<br>.....<br>.....<br>.....<br>.....<br>.....\|..... |
| BODY | MODEL NO.<br>TYPE OF BODY: GUIDING: NO. OF PORTS<br>BODY SIZE: PORT SIZE: DESIGN CV<br>END CONNECTION & RATING (ANSI)<br>BODY MATERIAL<br><br>PACKING: MATERIAL SINGLE / DOUBLE<br>BONNET TYPE<br>TRIM FORM<br><br>TRIM MATERIAL: SEAT \| PLUG<br>: CAGE \| GUIDE BUSH<br><br>FLOW<br>OUTLET VELOCITY<br>REQUIRED LEAKAGE CLASS<br>NOISE LEVEL (dBA) (spec. 3.1.14)<br>VACUUM SERVICE<br>ANTI CAVITATION TRIM | Bidder to specify<br>[•] GLOBE [] ANGLE \| [] TOP [•] CAGE \| ONE<br><br>[•] BWE [] SWE [] FLANGED<br>[•] A216 WCB [] A217 WC6 [] SS [] A217 CS<br>[] A351 CF8M<br>[] PTFE [•] GRAFOIL [] DOUBLE [•] SINGLE<br>[] STD [] EXTENDED [] FINNED<br>[] LINEAR [•] EQ. PERCENTAGE<br>[] QUICK OPEN (ON/OFF)<br>SS 316 STELLITED \| SS 316 STELLITED<br>17-4 PH SS \| SS 316 STELLITED<br><br>[] BELOW SEAT [] ABOVE SEAT<br>[•] < 7 M/SEC (WATER) \| [] MAC NO < 1/3 (STM)<br>[] II [] III [•] IV [] V [] VI<br>LESS THAN 85 dBA<br>[] YES [•] NO<br>[] YES [•] NO | .....<br>.....\|.....\|.....\|.....<br>.....\|.....\|.....<br>.....<br>.....<br>.....<br>.....<br>.....<br>.....<br>.....\|.....<br>.....\|.....<br>.....<br>.....<br>.....\|.....<br>.....<br>.....<br>.....<br>..... |
| PNEUMATIC ACTUATOR | MODEL NO. & SIZE<br>CLOSE AT : OPEN AT (KG/CM2g)<br>TRAVEL TIME FOR<br>OPEN TO CLOSE, CLOSE TO OPEN<br>VALVE POSN. ON SIGNAL AIR FAILURE<br>VALVE POSN. ON SUPPLY AIR FAILURE | Bidder to specify<br>0.2 \| 1<br>< 10 SEC<br>\|<br>[] TO OPEN [] STAYPUT [•] TO CLOSE<br>[•] STAYPUT | .....\|.....<br>.....\|.....<br>.....<br>.....<br>.....<br>..... |
| ACCESSORIES | POSITIONER (SMART ELECTRO PNEUMATIC)<br>AIR FILTER REGULATOR<br>AIR LOCK RELAY<br>POSITION LIMIT SWITCH<br>POSITION TRANSMITTER<br>SOLENOID VALVE<br>E/P CONVERTER<br>JUNCTION BOX<br>HAND WHEEL (SIDE MOUNTED)<br>LOCAL POSITION INDICATOR | [•] REQUIRED [] NOT REQUIRED<br><br>[•] REQUIRED [] NOT REQUIRED<br>[•] REQUIRED [] NOT REQUIRED<br>[•] REQUIRED [] NOT REQUIRED<br>PART OF POSITIONER<br>[•] REQUIRED [] NOT REQUIRED<br>PART OF POSITIONER<br>[•] REQUIRED [] NOT REQUIRED<br>[•] REQUIRED<br>[•] REQUIRED | .....<br>.....<br>.....<br>.....<br>.....<br>.....<br>.....<br>.....<br>.....<br>..... |

Tag No.: ECW83 Qty.: ONE (1) NO. PER UNIT Date Sheet No. PES-145-06-DS1-0

## DATA SHEET – A & B

| DATA SHEET – A FOR CONTROL VALVE (WITH PNEUMATIC ACTUATOR) (TO BE FILLED BY PURCHASER) | | | DATA SHEET – B (TO BE FILLED UP BY BIDDER) |
|---|---|---|---|
| PERFORMANCE OF VALVE | LINEARITY | ± 2% | ..... |
| | HYSTERISIS | ± 1% | ..... |
| | SENSITIVITY | ± 0.5% | ..... |
| | ACCURACY (OVERALL) | ± 2% | ..... |

SERVICE CONDITION

| SL. No. + | LOAD | FLOW (T/HR) | INLET PR. KG/CM2(A) | OUTLET PR. KG/CM2(A) | TEMP DEG (C) | CALC ULATED CV | % VLV LIFT | VLV O/L VELOCITY |
|---|---|---|---|---|---|---|---|---|
| 1 | 100 % | 500 | 8.5 | 3.0 | 38 | | | |
| 2 | 75 % | 375 | 8.5 | 3.0 | 38 | | | |
| 3 | 50 % | 250 | 8.5 | 3.0 | 38 | | | |
| 4 | 25 % | 125 | 8.5 | 3.0 | 38 | | | |
| 5 | | | | | | | | |

| | |
|---|---|
| VALVE TYPE | [] CAVITATION [] FLASHING<br>[] HIGH DP |
| MAX SHUT OFF PRESS ( KG/CM2g) 12<br>BODY DESIGN : PRESS (KG/CM2g) \| TEMP (DEG C) 12 \| 60<br>IBR FORM III-C [] REQUIRED [•] NOT REQUIRED | .....<br>.....\|.....<br>..... |
| TOTAL WEIGHT (VALVE + ACTUATOR + ACCESSORIES) Kg | ..... |

**Tag No.**..... **Quantity**.....

Data Sheet No. PES-145-06-DS1-1

**APPLICABLE FOR TAG Nos.WHEREVER STATEMENT "REQUIRED" INDICATED IN THE INDIVIDUAL CV DATA SHEETS**

**DATA SHEET – A& B for ACCESSORIES**

| | **DATA SHEET – A FOR CONTROL VALVE (WITH PNEUMATIC ACTUATOR) (TO BE FILLED BY PURCHASER)** | | | | | | DATA SHEET – B (TO BE FILLED-UP BY BIDDER) |
|---|---|---|---|---|---|---|---|
| **POSITIONER (SMART)** WITH HART PROTOCOL | MFR. & MODEL NUMBER | | | Bidder To Specify | | | |
| | BYPASS | GAUGES | ENCL. CLASS | ☐ YES ■ NO | ☐ THREE ■ TWO | ■ IP-65 | |
| | INPUT SIGNAL (Kg / $Cm^2$) | | | ■ 0.2 – 1.0 | ☐ 0.2 – 0.6 | ☐ 0.6 – 1.0 | |
| | OUTPUT SIGNAL (Kg / $Cm^2$) | | | TO SUIT ACTUATOR | | | |
| **AIR FILTER REGULATOR** TWO (2) Nos. PER CV | MFR. & MODEL NUMBER | | | Bidder To Specify | | | |
| | AIR SUPPLY PRESS (Kg / $Cm^2$ g) | | | ■ 7.0 | | | |
| | OUTPUT PRESS (Kg / $Cm^2$ g) | | | TO SUIT ACTUATOR | | | |
| | FILTER SIZE | | | 5 MICRON | | | |
| | OUTPUT GAUGE | | | ■ REQUIRED ☐ NOT REQUIRED | | | |
| **AIR LOCK** | MFR. & MODEL NUMBER | | | Bidder To Specify | | | |
| | SET PRESS (Kg / $Cm^2$) | | | Bidder To Specify | | | |
| | SUPPLY PRESS (Kg / $Cm^2$) | | | ■ 7.0 | | | |
| | RESET TYPE | | | AUTO | | | |
| | VENT PLUG | | | REQUIRED | | | |
| | ENCLOSURE CLASS | | | ■ IP 65 | | | |
| **LIMIT SWITCH** | MFR. & MODEL NUMBER | | | Bidder To Specify | | | |
| | OPEN posn | INT posn | CLOSE posn | **1 NO.** | **---** | **1 NO.** | |
| | CONTACT TYPE | | | SPDT 2 NO + 2 NC | | | |
| | RATING (AC / DC) | | | 5A 240V AC AND 0.2A 220V DC | | | |
| | ENCLOSURE CLASS | | | ■ IP 55 ☐ | | | |
| **POSITION TRANSMITTER** **(PART OF POSITIONER)** | MFR. & MODEL NUMBER | | | **PART OF POSITIONER** | | | |
| | TYPE | | | ■ Electronic (2-Wire) Contactless ☐ OTHER | | | |
| | SUPPLY | | | ■ 24V DC | | | |
| | OUTPUT RATING | | | ■ 4-20mA | | | |
| | ACCURACY | | | ± 1% FS | | | |
| | ENCLOSURE CLASS | | | ■ IP 65 | | | |
| **SOLENOID VALVE** | MFR. & MODEL NUMBER | | | Bidder To Specify | | | |
| | RATING | | | ■ 24V DC ☐ 220V DC ☐ 240V AC ☐ | | | |
| | TYPE | | | 3-WAY (UNIVERSAL OPERATION TYPE) | | | |
| | OPERATION | QUANTITY | | ☐ Stayput ■ Interlock | ■ 1 ☐ 2 | | |
| | COIL INSULATION CLASS | | | CLASS - H | | | |
| | ENCLOSURE CLASS | | | ■ IP 65 | | | |
| **HANDWHEEL** | ORIENTATION | | | ☐ TOP MOUNTED ■ SIDE MOUNTED | | | |
| **JUNCTION BOX** | NO. OF WAYS | | | ☐ 24-WAYS ☐ AS REQUIRED ■ 36-Ways | | | |
| | SIZE | | | AS REQUIRED | | | |
| | CABLE GLANDS (Size / Quantity) | | | AS REQUIRED (Double Compression Type). | | | |
| | ENCLOSURE CLASS | | | ■ IP 65 | | | |
| **I/P CONVERTER** **(PART OF POSITIONER)** | INPUT SIGNAL | POWER SUPPLY | | **PART OF POSITIONER** | | | |
| | SPLIT RANGE | | | ----- | | | |
| | ENCLOSURE CLASS | | | ----- | | | |
| | LINEARITY | | | ----- | | | |
| | HYSTERISIS | | | ----- | | | |
| **Cu. Tubing & Fittings / per CV** | **This is in addition to cu. Tubing and fittings which are integral part of CV** | | | 15 Meters of ¼ " PVC coated Cu. Tubing, with 1 set of Fittings for each CV for connection to IA Header on one end and accessories on another end of CV. | | | |

| |
|---|
| COMPANY SEAL |
| NAME |
| SIGNATURE |

# SECTION – D

# DATA SHEET – C

| | NAME |
|---|---|
| | SIGNATURE |
| | DATE |

**Tag No……. Quantity…….** Data Sheet No. PES-145-06-DS2-0

**DATA SHEET C**

**DATA SHEET – C FOR CONTROL VALVE (WITH PNEUMATIC ACTUATOR)**
**(TO BE FILLED BY THE BIDDER AFTER THE AWARD OF CONTRACT)**

| | | |
|---|---|---|
| **GENERAL*** | PROJECT | |
| | SERVICE | |
| | LOCATION | |
| | DUTY | |
| | PIPE SIZE (inlet / outlet) | |
| | PIPE MATERIAL (inlet / outlet) | |
| **BODY** | MODEL NUMBER | |
| | TYPE OF BODY : GUIDING : NO. OF PORTS | |
| | BODY SIZE : PORT SIZE : DESIGN DV | |
| | END CONNECTION & RATING (ANSI) | |
| | BODY MATERIAL | |
| | PACKING MATERIAL SINGLE / DOUBLE | |
| | BONNET TYPE | |
| | TRIM FORM | |
| | TRIM MATERIAL : SEAT \| PLUG | |
| | TRIM MATERIAL : CAGE \| GUIDE | |
| | FLOW | |
| | OUTLET VELOCITY | |
| | REQUIRED LEAKAGE CLASS | |
| | NOISE LEVEL (dBA) (Spec. 3.1.14) | |
| | VACUUM SERVICE | |
| | ANTI CAVITATION TRIM | |
| **PNEUMATIC ACTUATOR** | MODEL NO. & SIZE | |
| | CLOSE AT : OPEN AT (Kg / $Cm^2$g) | |
| | *TRAVEL TIME FOR OPEN TO CLOSE, CLOSE TO OPEN | |
| | *VALVE POSN. ON SIGNAL AIR FAILURE | |
| | *VALVE POSN. ON SUPPLY AIR FAILURE | |
| **ACCESSORIES** | POSITIONER (SMART) | |
| | AIR FILTER REGULATOR | |
| | AIR LOCK RELAY | |
| | POSITION LIMIT SWITCH | |
| | POSITION TRANSMITTER | |
| | SOLENOID VALVE | |
| | E / P CONVERTER | |
| | JUNCTION BOX | |
| | HAND WHEEL (SIDE MOUNTED) | |
| | LOCAL POSITION INDICATOR | |

**Tag No……. Quantity…….** Data Sheet No. PES-145-06-DS2-0

**DATA SHEET C**

**DATA SHEET – C FOR CONTROL VALVE (WITH PNEUMATIC ACTUATOR)**
**(TO BE FILLED BY THE BIDDER AFTER THE AWARD OF CONTRACT)**

| | | |
|---|---|---|
| **PERFORMANCE OF VALVE** | LINEARITY | |
| | HYSTERISIS | |
| | SENSITIVITY | |
| | ACCURACY (OVERALL) | |

| **SERVICE CONDITION*** | **SL. NO.** | **LOAD** | **FLOW (T/HR)** | **INLET PR. (KG/CM$^2$ (A)** | **OUTLET PR. (KG/CM$^2$ (A)** | **TEMP DEG. C** | **CALCULATED CV** | **% VALVE LIFT** | **VALVE O/L VELOCITY** |
|---|---|---|---|---|---|---|---|---|---|
| | | | | | | | | | |
| | | | | | | | | | |
| | | | | | | | | | |
| | | | | | | | | | |
| | | | | | | | | | |
| | VALVE TYPE | | | | | | | | |
| | * MAX SHUT OFF PRESS (**(KG/CM$^2$g)** | | | | | | | | |
| | * BODY DESIGN : PRESS (**(KG/CM$^2$g)** **\| TEMP (DEG. C)** | | | | | | | | |
| | * IBR FORM III-C | | | | | | | | |

TOTAL WEIGHT (VALVE + ACTUATOR + ACCESSORIES) KG.

| | Technical specification for **Control Valves (Without FDV-14) with Accessories** (Pneumatically Operated) | SPECIFICATION NO. **PE-TS-381-145-I004** |
|---|---|---|
| | | VOLUME **II-B** |
| | | SECTION **D** |
| | | REV. NO. 00 / DATE: **14.03.2013** |
| | | SHEET OF |

| | |
|---|---|
| | DATE |

**Tag No.……. Quantity…….** Data Sheet No. PES-145-06-DS2-1

**DATA SHEET C**

**DATA SHEET – C FOR CONTROL VALVE (WITH PNEUMATIC ACTUATOR)**
**(TO BE FILLED BY THE BIDDER AFTER THE AWARD OF CONTRACT)**

| | | | | |
|---|---|---|---|---|
| **POSITIONER (SMART)** WITH HART PROTOCOL | MFR. & MODEL NUMBER | | | |
| | BYPASS | GAUGES | ENCL. CLASS | |
| | INPUT SIGNAL (Kg / $Cm^2$) | | | |
| | OUTPUT SIGNAL (Kg / $Cm^2$) | | | |
| **AIR FILTER REGULATOR** TWO (2) Nos. PER CV | MFR. & MODEL NUMBER | | | |
| | AIR SUPPLY PRESS (Kg / $Cm^2$ g) | | | |
| | OUTPUT PRESS (Kg / $Cm^2$ g) | | | |
| | OUTPUT GAUGE | | | |
| | FILTER SIZE | | | |
| **AIR LOCK** | MFR. & MODEL NUMBER | | | |
| | SET PRESS (Kg / $Cm^2$) | | | |
| | SUPPLY PRESS (Kg / $Cm^2$) | | | |
| | RESET TYPE | | | |
| | VENT PLUG | | | |
| **LIMIT SWITCH** | MFR. & MODEL NUMBER | | | |
| | OPEN posn | INT posn | CLOSE posn | |
| | CONTACT TYPE | | | |
| | RATING (AC / DC) | | | |
| | ENCLOSURE CLASS | | | |
| **POSITION TRANSMITTER** **(PART OF POSITIONER)** | MFR. & MODEL NUMBER | | | |
| | TYPE | | | |
| | SUPPLY | | | |
| | OUTPUT RATING | | | |
| | ACCURACY | | | |
| | ENCLOSURE CLASS | | | |
| **SOLENOID VALVE** | MFR. & MODEL NUMBER | | | |
| | RATING | | | |
| | OPERATION | QUANTITY | | |
| | COIL INSULATION CLASS | | | |
| | ENCLOSURE CLASS | | | |
| **HANDWHEEL** | ORIENTATION | | | |
| **JUNCTION BOX** | NO. OF WAYS | | | |
| | SIZE | | | |
| | CABLE GLANDS (Size / Quantity) | | | |
| | ENCLOSURE CLASS | | | |
| **I/P CONVERTER** **(PART OF POSITIONER)** | INPUT SIGNAL | POWER SUPPLY | | |
| | SPLIT RANGE | | | |
| | ENCLOSURE CLASS | | | |
| | LINEARITY | | | |
| | HYSTERISIS | | | |
| **Cu. Tubing & Fittings / per CV** | 15 Meters of ¼ " PVC coated Cu. Tubing, with 1 set of Fittings for connection to IA Header on one end and accessories on another end of CV | | | |

| | |
|---|---|
| | COMPANY SEAL |
| | NAME |
| | SIGNATURE |
| | DATE |

# SECTION – D

# BILL OF QUANTITY

# BILL OF QUANTITY

| S.NO | ITEM DESCRIPTION | | Qty/Unit | Qty for Two Units |
|---|---|---|---|---|
| [A] CONTROL VALVES COMPLETE WITH PNEUMATIC ACTUATOR AND ALL ACCESSORIES MOUNTED , PIPED AND TERMINATED ON JB | | | | |
| S. No. | TAG NO. | SERVICE | | |
| 1 | ASV-8 | D/A Pegging from Aux. Steam Header | 01 | 02 |
| 2 | CRHV-6 | D/A Pegging from CRH Line | 01 | 02 |
| 3 | CDV-22 & CDV-25 | Main Condensate Control | 02 | 04 |
| 4 | CDV-10, CDV-12 & CDV-14 | CEP A/B/C Minimum Recirculation | 03 | 06 |
| 5 | CDV-43 | Excess Dump Control | 01 | 02 |
| 6 | CDV-39 | GSC min. flow recirculation | 01 | 02 |
| 7 | CDV-67 | Condensate for Flash Tank-B | 01 | 02 |
| 8 | CDV-72 | Condensate for Valve Gland Sealing | 01 | 02 |
| 9 | DRV-53 | HPH-7A Normal Drain to HPH-6A | 01 | 02 |
| 10 | DRV-59 | HPH-7B Normal Drain to HPH-6B | 01 | 02 |
| 11 | DRV-56 | HPH-7A Alt Drain to F/T-A | 01 | 02 |
| 12 | DRV-62 | HPH-7B Alt Drain to F/T-B | 01 | 02 |
| 13 | DRV-2 | HPH-6A Normal Drain to HPH-5A | 01 | 02 |
| 14 | DRV-8 | HPH-6B Normal Drain to HPH-5B | 01 | 02 |
| 15 | DRV-5 | HPH-6A Alt Drain to F/T-B | 01 | 02 |
| 16 | DRV-11 | HPH-6B Alt Drain to F/T-B | 01 | 02 |
| 17 | DRV-15 | HPH-5A Drain to Deaerator | 01 | 02 |
| 18 | DRV-22 | HPH-5B Drain to Deaerator | 01 | 02 |
| 19 | DRV-18 | HPH-5A Alt Drain to F/T-A | 01 | 02 |
| 20 | DRV-25 | HPH-5B Alt Drain to F/T-A | 01 | 02 |
| 21 | DRV-28 | LPH-3 Normal Drain to LPH-2 | 01 | 02 |
| 22 | DRV-31 | LPH-3 Alt Drain to F/T-A | 01 | 02 |
| 23 | DRV-34 | LPH-2 Normal Drain to LPH-1 | 01 | 02 |
| 24 | DRV-37 | LPH-2 Alt. Drain to F/T-B | 01 | 02 |
| 25 | DRV-48 | Deaerator Overflow to F/T-A | 01 | 02 |
| 26 | DMV-19 | DM Normal MU to Hotwell | 01 | 02 |
| 27 | DMV-23 | DM Emergency MU to Hotwell | 01 | 02 |
| 28 | ECW-20 | TG-ECW System | 01 | 02 |
| 29 | ECW-83 | SG-ECW System | 01 | 02 |

| | | | | |
|---|---|---|---|---|
| **[B]** | 15 Meters of 10mm OD x 1.5mm thick PVC Coated annealed Cu. Tubing **(for each CV) (To be supplied Loose)** | | 480 METERS | 960 METERS |
| **[C]** | **FITTINGS: for each CV (To be Supplied Loose)** | **(i)** BRASS FITTING-Double Compression Type for Connection to Air Filter Regulator | 1 LOT | 2 LOT |
| | | **(ii)** BRASS FITTING- Double Compression Type for Connection to Solenoid Valve | 1 LOT | 2 LOT |
| | | **(iii)** BRASS FITTING- Double Compression Type for Connection to IA Header isolation vlv. | 1 LOT | 2 LOT |
| | | **(iv)** BRASS TEE | 1 LOT | 2 LOT |
| **[D]** | **START-UP/COMMISSIONING SPARES :** ( TOTAL PRICE FOR 1 SETS OF BODY AND BONNET GASKET & 1 SETS OF GLAND PACKINGS PER CV ) | | 1 LOT | 2 LOT |
| **[E]** | **MANDATORY SPARES** | | | 1 LOT |
| **[F]** | **DIAGNOSTIC SOFTWARE**: Software for diagnostic & configuration with facility of configuring all valve tags in a unit through polling & without any change in wiring. | | 1 LOT | 2 LOT |

# SECTION – D

# QUALITY PLAN

| | MANUFACTURERS NAME & ADRESS<br>*(AS PER NTPC APPROVED VENDOR LIST)* | STANDARD MANUFACTURING QUALITY PLAN<br>ITEM : **CONTROL VALVES**<br>SUB SYSTEM : | REV. : 00<br>DATE : 30.10.09 | PROJECT: 2 X 600 MW SCCL TPP<br>CONTRACT No.: 381<br>CONTRACTOR: ***BHEL-PEM*** |
|---|---|---|---|---|

| Sl. No. | COMPONENT & OPERATION | CHARACTERISTICS | CLASS | TYPE OF CHECK | QUANTUM OF CHECK | REFERENCE DOCUMENT | ACCEPTANCE NORMS | FORMAT OF RECORDS | Agency D | Agency M | Agency C | Agency N | Remarks |
|---|---|---|---|---|---|---|---|---|---|---|---|---|---|
| 1 | 2 | 3 | 4 | 5 | 6 | 7 | 8 | 9 | 10 | | | | 11 |
| 1.1 | Body & Bonnet castings/Forgings, Plug stem, Actuator stem, Seat Ring | Physical, Chemical Props | MA | Phys.Chem Tests | 1/Heat (HT Batch) | Tech.Spec / Apprd Drg | Tech.Spec / Apprd Drg | TC | √ | P, W | V | V | |
| | | Heat Treatment | MA | Review of HT | Each HT | DO | DO | TC | √ | P, W | V | V | Only for Rating 900 & Above. Applicable for body & Bt. only. For lower rating as called for in spec. (NTPC). |
| | | Internal Quality of castings | MA | RT for body & UT for Bonnet (NDT) | 100% | ANSI B16.34 | ANSI B16.34 | Test Report | √ | P, W | V | V | Valve stem for dia > 40mm shall be done UT on 100% as per ASTM A-388 A & ASME B 16.34 ,CHP for review of records. |
| | | Surface Quality | MA | Visual | 100% | MSS SP 55 | MSS SP 55 | TC | √ | P, W | V | - | |
| | | Pressure test for shell | MA | Hyd. Test | 100% | ANSI B16.34 | ANSI B16.34 | TC | √ | P, W, | V | - | For Body & Bonnet after machining |

| PREPARED BY | APPROVED BY | LEGEND:<br>*RECORDS, IDENTIFIED WITH "TICK" SHALL BE ESSENTIALLY INCLUDED BY CONTRACTOR IN QA DOCUMENTATION<br>** M: MANUFACTURER/SUBCONTRACTOR C: CONTRACTOR/NOMINATED INSPN. AGENCY<br>N: NTPC INDICATE "**P**" PERFORM "**W**" WITNESS AND "**V**" VERIFICATION AS APPROPRIATE<br>"**CHP**" NTPC SHALL IDENTIFIED IN COLUMN "**N**" | FOR NTPC USE | DOCUMENT No. |
|---|---|---|---|---|
| SIGNATURE | | | REVIEWED BY | 1 OF 9<br>NAME & SIGN. OF APPROVING AUTHORITY & SEAL |

CR = Critical, MA = Major, MI = Minimum, TC = Test Certificate, P = Perform, W = Witness, V = Verification,

| | MANUFACTURERS NAME & ADRESS<br>*(AS PER NTPC APPROVED VENDOR LIST)* | STANDARD MANUFACTURING QUALITY PLAN<br>ITEM : **CONTROL VALVES**<br>SUB SYSTEM : | REV. : 00<br>DATE : 30.10.09 | PROJECT: 2 X 600 MW SCCL TPP<br>CONTRACT No.: 381<br>CONTRACTOR: ***BHEL-PEM*** |
|---|---|---|---|---|

| Sl. No. | COMPONENT & OPERATION | CHARACTERISTICS | CLASS | TYPE OF CHECK | QUANTUM OF CHECK | REFERENCE DOCUMENT | ACCEPTANCE NORMS | FORMAT OF RECORDS | Agency D | Agency M | Agency C | Agency N | Remarks |
|---|---|---|---|---|---|---|---|---|---|---|---|---|---|
| 1 | 2 | 3 | 4 | 5 | 6 | 7 | 8 | 9 | 10 | | | | 11 |
| 1.2 | Diaphragm | Surface Quality | MA | Visual | 100% | Mfr. Std | Mfr. Std. | TC | | P, W | V | - | |
| | | Hardness | MA | Measurement | 100% | DO | DO | TC | | P, W | V | - | |
| | | Endurance/Life | MA | Cyclic 10,000 Cycles | 1/Type | 10,000 Cycles , as per Mfr. Std | No Damage | TC | | P, W | V | - | |

| PREPARED BY | APPROVED BY | LEGEND:<br>*RECORDS, IDENTIFIED WITH "TICK" SHALL BE ESSENTIALLY INCLUDED BY CONTRACTOR IN QA DOCUMENTATION<br>** M: MANUFACTURER/SUBCONTRACTOR C: CONTRACTOR/NOMINATED INSPN. AGENCY<br>N: NTPC INDICATE "**P**" PERFORM "**W**" WITNESS AND "**V**" VERIFICATION AS APPROPRIATE<br>"**CHP**" NTPC SHALL IDENTIFIED IN COLUMN "**N**" | FOR NTPC USE | DOCUMENT No. |
|---|---|---|---|---|
| SIGNATURE | | | REVIEWED BY | 2 OF 9<br>NAME & SIGN. OF APPROVING AUTHORITY & SEAL |

CR = Critical, MA = Major, MI = Minimum, TC = Test Certificate, P = Perform, W = Witness, V = Verification,

| | MANUFACTURERS NAME & ADRESS<br>(AS PER NTPC APPROVED VENDOR LIST) | STANDARD MANUFACTURING QUALITY PLAN<br>ITEM : **CONTROL VALVES**<br>SUB SYSTEM : | REV. : 00<br>DATE : 30.10.09 | PROJECT: 2 X 600 MW SCCL TPP<br>CONTRACT No.: 381<br>CONTRACTOR: ***BHEL-PEM*** |
|---|---|---|---|---|

| Sl. No. | COMPONENT & OPERATION | CHARACTERISTICS | CLASS | TYPE OF CHECK | QUANTUM OF CHECK | REFERENCE DOCUMENT | ACCEPTANCE NORMS | FORMAT OF RECORDS | Agency D | Agency M | Agency C | Agency N | Remarks |
|---|---|---|---|---|---|---|---|---|---|---|---|---|---|
| 1 | 2 | 3 | 4 | 5 | 6 | 7 | 8 | 9 | 10 | | | | 11 |
| 1.3 | Springs | Composition | MA | Chemical Analysis | 1Sample Heat/lot | Matl.spec/ Mfr. Std | Matl.spec/ Mfr. Std | TC | | P, W | V | - | |
| | | Mech. Props. | MA | Mech Test | DO | DO | DO | TC | | P, W | V | - | |
| | | Dimension | MA | Measurement | DO | Mfr. Std | Mfr. Std | IR | | P, W | V | - | |
| | | Performance | MA | Stiffness Ratio | 100% | Apprd Drg/Matl spec | ApprdDrg/ Matl. spec. | TC | | P, W | V | - | |
| | | | | Cyclic Test (Endurance) | 1/Type | DO | DO | TC | | P, W | V | - | |

| PREPARED BY | APPROVED BY | LEGEND:<br>*RECORDS, IDENTIFIED WITH "TICK" SHALL BE ESSENTIALLY INCLUDED BY CONTRACTOR IN QA DOCUMENTATION<br>** M: MANUFACTURER/SUBCONTRACTOR C: CONTRACTOR/NOMINATED INSPN. AGENCY<br>N: NTPC INDICATE "**P**" PERFORM "**W**" WITNESS AND "**V**" VERIFICATION AS APPROPRIATE<br>"**CHP**" NTPC SHALL IDENTIFIED IN COLUMN "**N**" | FOR NTPC USE | DOCUMENT No. |
|---|---|---|---|---|
| SIGNATURE | | | REVIEWED BY | 3 OF 9<br>NAME & SIGN. OF APPROVING AUTHORITY & SEAL |

CR = Critical, MA = Major, MI = Minimum, TC = Test Certificate, P = Perform, W = Witness, V = Verification,

| | MANUFACTURERS NAME & ADRESS<br>*(AS PER NTPC APPROVED VENDOR LIST)* | STANDARD MANUFACTURING QUALITY PLAN<br>ITEM : **CONTROL VALVES**<br>SUB SYSTEM : | REV. : 00<br>DATE : 30.10.09 | PROJECT: 2 X 600 MW SCCL TPP<br>CONTRACT No.: 381<br>CONTRACTOR: ***BHEL-PEM*** |
|---|---|---|---|---|

| Sl. No. | COMPONENT & OPERATION | CHARACTERISTICS | CLASS | TYPE OF CHECK | QUANTUM OF CHECK | REFERENCE DOCUMENT | ACCEPTANCE NORMS | FORMAT OF RECORDS | Agency D | Agency M | Agency C | Agency N | Remarks |
|---|---|---|---|---|---|---|---|---|---|---|---|---|---|
| 1 | 2 | 3 | 4 | 5 | 6 | 7 | 8 | 9 | 10 | | | | 11 |
| 1.4 | Functional Test(Limit switches,solenoids,Positioner,AFR,ALR ,Position Transmitter) | Routine tests | MA | HV,IR continuity function | 100% | Rele. Std | Rele. Std | TC | | P, W | V | - | Incase TC is not available ,actual test shall be conducted. |
| | | Type tests | MA | Verf. of type TC | One per type | DO | DO | TC | | P, W | V | - | |
| | | Degree of Protection | MA | DO | DO | DO | DO | TC | | P, W | V | - | |
| | | Functional Test | - | Verification of operation during final inspection | --------- | ---------- | ---------- | ---------- | √ | V | V | V | During final inspection |
| 1.5 | Pressure Gauge | Performance | MA | Verf.of calibration certs | 100% | Mfr's std | Mfr's std | TC | | P, W | V | - | |
| | | Marking & Dimension | MA | Visual | 100% | Apprd drg/Tech.spec. | Apprd drg/Tech spec. | TC | | P, W | V | - | |

| PREPARED BY | APPROVED BY | LEGEND:<br>*RECORDS, IDENTIFIED WITH "TICK" SHALL BE ESSENTIALLY INCLUDED BY CONTRACTOR IN QA DOCUMENTATION<br>** M: MANUFACTURER/SUBCONTRACTOR C: CONTRACTOR/NOMINATED INSPN. AGENCY<br>N: NTPC INDICATE "**P**" PERFORM "**W**" WITNESS AND "**V**" VERIFICATION AS APPROPRIATE<br>"**CHP**" NTPC SHALL IDENTIFIED IN COLUMN "**N**" | FOR NTPC USE | DOCUMENT No. |
|---|---|---|---|---|
| SIGNATURE | | | REVIEWED BY | 4 OF 9<br>NAME & SIGN. OF APPROVING AUTHORITY & SEAL |

CR = Critical, MA = Major, MI = Minimum, TC = Test Certificate, P = Perform, W = Witness, V = Verification,

| | MANUFACTURERS NAME & ADRESS<br>*(AS PER NTPC APPROVED VENDOR LIST)* | STANDARD MANUFACTURING QUALITY PLAN<br>ITEM : **CONTROL VALVES**<br>SUB SYSTEM : | REV. : 00<br>DATE : 30.10.09 | PROJECT:2 X 600 MW SCCL TPP<br>CONTRACT No.: 381<br>CONTRACTOR: ***BHEL-PEM*** |
|---|---|---|---|---|

| Sl. No. | COMPONENT & OPERATION | CHARACTERISTICS | CLASS | TYPE OF CHECK | QUANTUM OF CHECK | REFERENCE DOCUMENT | ACCEPTANCE NORMS | FORMAT OF RECORDS | Agency D | Agency M | Agency C | Agency N | Remarks |
|---|---|---|---|---|---|---|---|---|---|---|---|---|---|
| 1 | 2 | 3 | 4 | 5 | 6 | 7 | 8 | 9 | 10 | | | | 11 |
| 2.0 | **IN PROCESS QUALITY CONTROL** | | | | | | | | | | | | |
| 2.1 | Body & Bonnet after machining & plug, Plug with Actuator Stem, | Surface Flaws<br>* MP FOR BODY & BONNET ONLY | MA | * MP/ PT<br>(*SEE NOTE 6) | All Accessible surface | ANSI B16.34 | ANSI B16.34 | Test Records(NDT) | | P | V | - | Butt weld shall be included |
| | | Dimensional check | MA | Measurement | 100% | Mfr's std | Mfr's std | Log sheets | | P | - | - | |
| | | Hardfacing wherever Applicable | MA | Hardness Meas. | Sample Pads | Mfr's std | Mfr's std | Records | | P | V | - | |
| | Guide Bush(Wherever applicable) | Dimensionsl | MI | Measurement | 100% | Appd drg | Appd Drg | Log sheet | | P | - | - | |
| | Lapping | Machining surface contact | MA | Blue Matching | 100% | ---------- | Proper Physical Contact | ---------- | | P | - | - | |

| PREPARED BY | APPROVED BY | LEGEND:<br>*RECORDS, IDENTIFIED WITH "TICK" SHALL BE ESSENTIALLY INCLUDED BY CONTRACTOR IN QA DOCUMENTATION<br>** M: MANUFACTURER/SUBCONTRACTOR C: CONTRACTOR/NOMINATED INSPN. AGENCY<br>N: NTPC INDICATE "**P**" PERFORM "**W**" WITNESS AND "**V**" VERIFICATION AS APPROPRIATE<br>"**CHP**" NTPC SHALL IDENTIFIED IN COLUMN "**N**" | FOR NTPC USE | DOCUMENT No. |
|---|---|---|---|---|
| SIGNATURE | | | REVIEWED BY | 5 OF 9<br>NAME & SIGN. OF APPROVING AUTHORITY & SEAL |

CR = Critical, MA = Major, MI = Minimum, TC = Test Certificate, P = Perform, W = Witness, V = Verification,

| | MANUFACTURERS NAME & ADRESS<br>(AS PER NTPC APPROVED VENDOR LIST) | STANDARD MANUFACTURING QUALITY PLAN<br>ITEM : **CONTROL VALVES**<br>SUB SYSTEM : | REV. : 00<br>DATE : 30.10.09 | PROJECT: 2 X 600 MW SCCL TPP<br>CONTRACT No.: 381<br>CONTRACTOR: ***BHEL-PEM*** |
|---|---|---|---|---|

| Sl. No. | COMPONENT & OPERATION | CHARACTERISTICS | CLASS | TYPE OF CHECK | QUANTUM OF CHECK | REFERENCE DOCUMENT | ACCEPTANCE NORMS | FORMAT OF RECORDS | Agency D | Agency M | Agency C | Agency N | Remarks |
|---|---|---|---|---|---|---|---|---|---|---|---|---|---|
| 1 | 2 | 3 | 4 | 5 | 6 | 7 | 8 | 9 | 10 | | | | 11 |
| 3.0 | **TESTS ON COMPLETED VALVES** | | | | | | | | | | | | |
| 3.1 | Actuator Chamber | Strength and Leakage | MA | Pneu test | 100% | ---------- | No leakage | TC | √ | P | W | W | |
| 3.2 | Body | Leak and Pr. Test | MA | Hydro test | 100% | ANSI B16.34 | ANSI B16.34 | TC | √ | P | W | W | |
| 3.3 | Seat leakage test for completed valve | Seat leakage | MA | Hydro test/pneumatic Test(As applicable) | 100% | ANSI B16.104 | Appd Data sheet/ANSI B16.104 | TC | √ | P | W | W | |
| 3.4 | Operation tests on completed valve | Valve Travel | MA | Measurement | 100% | As per spec & appd drgs | As per spec & appd drgs | TC | √ | P | W | W | |
| | | opening and closing time | MA | Measurement | 100% | As per spec and Appd drgs | As per spec and Appd drgs | TC | √ | P | W | W | |
| | | Linearity/CAM characteristics | MA | Measurement | 100% | As per spec and Appd drgs | As per spec and Appd drgs | TC | √ | P | W | W | |
| | | Hysterisis | MA | Measurement | 100% | | As per spec and Appd drgs | TC | √ | P | W | W | |

| PREPARED BY | APPROVED BY | LEGEND:<br>*RECORDS, IDENTIFIED WITH "TICK" SHALL BE ESSENTIALLY INCLUDED BY CONTRACTOR IN QA DOCUMENTATION<br>** M: MANUFACTURER/SUBCONTRACTOR C: CONTRACTOR/NOMINATED INSPN. AGENCY<br>N: NTPC INDICATE "**P**" PERFORM "**W**" WITNESS AND "**V**" VERIFICATION AS APPROPRIATE<br>"**CHP**" NTPC SHALL IDENTIFIED IN COLUMN "**N**" | FOR NTPC USE | DOCUMENT No. |
|---|---|---|---|---|
| SIGNATURE | | | REVIEWED BY | 6 OF 9<br>NAME & SIGN. OF APPROVING AUTHORITY & SEAL |

CR = Critical, MA = Major, MI = Minimum, TC = Test Certificate, P = Perform, W = Witness, V = Verification,

| | MANUFACTURERS NAME & ADRESS<br>*(AS PER NTPC APPROVED VENDOR LIST)* | STANDARD MANUFACTURING QUALITY PLAN<br>ITEM : **CONTROL VALVES**<br>SUB SYSTEM : | REV. : 00<br>DATE : 30.10.09 | PROJECT: 2 X 600 MW SCCL TPP<br>CONTRACT No.: 381<br>CONTRACTOR: ***BHEL-PEM*** |
|---|---|---|---|---|

| Sl. No. | COMPONENT & OPERATION | CHARACTERISTICS | CLASS | TYPE OF CHECK | QUANTUM OF CHECK | REFERENCE DOCUMENT | ACCEPTANCE NORMS | FORMAT OF RECORDS | Agency D | Agency M | Agency C | Agency N | Remarks |
|---|---|---|---|---|---|---|---|---|---|---|---|---|---|
| 1 | 2 | 3 | 4 | 5 | 6 | 7 | 8 | 9 | 10 | | | | 11 |
| 1.1 | Body & Bonnet castings/Forgings, Plug stem, Actuator stem, Seat Ring | Physical, Chemical Props | MA | Phys.Chem Tests | 1/Heat (HT Batch) | Tech.Spec / Apprd Drg | Tech.Spec / Apprd Drg | TC | √ | P, W | V | V | |
| | | Heat Treatment | MA | Review of HT | Each HT | DO | DO | TC | √ | P, W | V | V | Only for Rating 900 & Above. Applicable for body & Bt. only. For lower rating as called for in spec. (NTPC). |
| | | Internal Quality of castings | MA | RT for body & UT for Bonnet (NDT) | 100% | ANSI B16.34 | ANSI B16.34 | Test Report | √ | P, W | V | V | Valve stem for dia > 40mm shall be done UT on 100% as per ASTM A-388 A & ASME B 16.34 ,CHP for review of records. |
| | | Surface Quality | MA | Visual | 100% | MSS SP 55 | MSS SP 55 | TC | √ | P, W | V | - | |
| | | Pressure test for shell | MA | Hyd. Test | 100% | ANSI B16.34 | ANSI B16.34 | TC | √ | P, W, | V | - | For Body & Bonnet after machining |

| PREPARED BY | APPROVED BY | LEGEND:<br>*RECORDS, IDENTIFIED WITH "TICK" SHALL BE ESSENTIALLY INCLUDED BY CONTRACTOR IN QA DOCUMENTATION<br>** M: MANUFACTURER/SUBCONTRACTOR C: CONTRACTOR/NOMINATED INSPN. AGENCY<br>N: NTPC INDICATE "**P**" PERFORM "**W**" WITNESS AND "**V**" VERIFICATION AS APPROPRIATE<br>"**CHP**" NTPC SHALL IDENTIFIED IN COLUMN "**N**" | FOR NTPC USE | DOCUMENT No. |
|---|---|---|---|---|
| SIGNATURE | | | REVIEWED BY | 1 OF 9<br>NAME & SIGN. OF APPROVING AUTHORITY & SEAL |

CR = Critical, MA = Major, MI = Minimum, TC = Test Certificate, P = Perform, W = Witness, V = Verification,

| | MANUFACTURERS NAME & ADRESS<br>*(AS PER NTPC APPROVED VENDOR LIST)* | STANDARD MANUFACTURING QUALITY PLAN<br>ITEM : **CONTROL VALVES**<br>SUB SYSTEM : | REV. : 00<br>DATE : 30.10.09 | PROJECT: 2 X 600 MW SCCL TPP<br>CONTRACT No.: 381<br>CONTRACTOR: ***BHEL-PEM*** |
|---|---|---|---|---|

| Sl. No. | COMPONENT & OPERATION | CHARACTERISTICS | CLASS | TYPE OF CHECK | QUANTUM OF CHECK | REFERENCE DOCUMENT | ACCEPTANCE NORMS | FORMAT OF RECORDS | Agency D | Agency M | Agency C | Agency N | Remarks |
|---|---|---|---|---|---|---|---|---|---|---|---|---|---|
| 1 | 2 | 3 | 4 | 5 | 6 | 7 | 8 | 9 | 10 | | | | 11 |
| 1.2 | Diaphragm | Surface Quality | MA | Visual | 100% | Mfr. Std | Mfr. Std. | TC | | P, W | V | - | |
| | | Hardness | MA | Measurement | 100% | DO | DO | TC | | P, W | V | - | |
| | | Endurance/Life | MA | Cyclic 10,000 Cycles | 1/Type | 10,000 Cycles , as per Mfr. Std | No Damage | TC | | P, W | V | - | |

| PREPARED BY | APPROVED BY | LEGEND:<br>*RECORDS, IDENTIFIED WITH "TICK" SHALL BE ESSENTIALLY INCLUDED BY CONTRACTOR IN QA DOCUMENTATION<br>** M: MANUFACTURER/SUBCONTRACTOR C: CONTRACTOR/NOMINATED INSPN. AGENCY<br>N: NTPC INDICATE "**P**" PERFORM "**W**" WITNESS AND "**V**" VERIFICATION AS APPROPRIATE<br>"**CHP**" NTPC SHALL IDENTIFIED IN COLUMN "**N**" | FOR NTPC USE | DOCUMENT No. |
|---|---|---|---|---|
| SIGNATURE | | | REVIEWED BY | 2 OF 9<br>NAME & SIGN. OF APPROVING AUTHORITY & SEAL |

CR = Critical, MA = Major, MI = Minimum, TC = Test Certificate, P = Perform, W = Witness, V = Verification,

| | MANUFACTURERS NAME & ADRESS<br>(AS PER NTPC APPROVED VENDOR LIST) | STANDARD MANUFACTURING QUALITY PLAN<br>ITEM : **CONTROL VALVES**<br>SUB SYSTEM : | REV. : 00<br>DATE : 30.10.09 | PROJECT: 2 X 600 MW SCCL TPP<br>CONTRACT No.: 381<br>CONTRACTOR: ***BHEL-PEM*** |
|---|---|---|---|---|

| Sl. No. | COMPONENT & OPERATION | CHARACTERISTICS | CLASS | TYPE OF CHECK | QUANTUM OF CHECK | REFERENCE DOCUMENT | ACCEPTANCE NORMS | FORMAT OF RECORDS | Agency D | Agency M | Agency C | Agency N | Remarks |
|---|---|---|---|---|---|---|---|---|---|---|---|---|---|
| 1 | 2 | 3 | 4 | 5 | 6 | 7 | 8 | 9 | 10 | | | | 11 |
| 1.3 | Springs | Composition | MA | Chemical Analysis | 1Sample Heat/lot | Matl.spec/ Mfr. Std | Matl.spec/ Mfr. Std | TC | | P, W | V | - | |
| | | Mech. Props. | MA | Mech Test | DO | DO | DO | TC | | P, W | V | - | |
| | | Dimension | MA | Measurement | DO | Mfr. Std | Mfr. Std | IR | | P, W | V | - | |
| | | Performance | MA | Stiffness Ratio | 100% | Apprd Drg/Matl spec | ApprdDrg/ Matl. spec. | TC | | P, W | V | - | |
| | | | | Cyclic Test (Endurance) | 1/Type | DO | DO | TC | | P, W | V | - | |

| PREPARED BY | APPROVED BY | LEGEND:<br>*RECORDS, IDENTIFIED WITH "TICK" SHALL BE ESSENTIALLY INCLUDED BY CONTRACTOR IN QA DOCUMENTATION<br>** M: MANUFACTURER/SUBCONTRACTOR C: CONTRACTOR/NOMINATED INSPN. AGENCY<br>N: NTPC INDICATE "**P**" PERFORM "**W**" WITNESS AND "**V**" VERIFICATION AS APPROPRIATE<br>"**CHP**" NTPC SHALL IDENTIFIED IN COLUMN "**N**" | FOR NTPC USE | DOCUMENT No. |
|---|---|---|---|---|
| SIGNATURE | | | REVIEWED BY | 3 OF 9<br>NAME & SIGN. OF APPROVING AUTHORITY & SEAL |

CR = Critical, MA = Major, MI = Minimum, TC = Test Certificate, P = Perform, W = Witness, V = Verification,

| | MANUFACTURERS NAME & ADRESS<br>*(AS PER NTPC APPROVED VENDOR LIST)* | STANDARD MANUFACTURING QUALITY PLAN<br>ITEM : **CONTROL VALVES**<br>SUB SYSTEM : | REV. : 00<br>DATE : 30.10.09 | PROJECT: 2 X 600 MW SCCL TPP<br>CONTRACT No.: 381<br>CONTRACTOR: ***BHEL-PEM*** |
|---|---|---|---|---|

| Sl. No. | COMPONENT & OPERATION | CHARACTERISTICS | CLASS | TYPE OF CHECK | QUANTUM OF CHECK | REFERENCE DOCUMENT | ACCEPTANCE NORMS | FORMAT OF RECORDS | Agency D | Agency M | Agency C | Agency N | Remarks |
|---|---|---|---|---|---|---|---|---|---|---|---|---|---|
| 1 | 2 | 3 | 4 | 5 | 6 | 7 | 8 | 9 | 10 | | | | 11 |
| 1.4 | Functional Test(Limit switches,solenoids,Positioner,AFR,ALR ,Position Transmitter) | Routine tests | MA | HV,IR continuity function | 100% | Rele. Std | Rele. Std | TC | | P, W | V | - | Incase TC is not available ,actual test shall be conducted. |
| | | Type tests | MA | Verf. of type TC | One per type | DO | DO | TC | | P, W | V | - | |
| | | Degree of Protection | MA | DO | DO | DO | DO | TC | | P, W | V | - | |
| | | Functional Test | - | Verification of operation during final inspection | --------- | ---------- | ---------- | ---------- | √ | V | V | V | During final inspection |
| 1.5 | Pressure Gauge | Performance | MA | Verf.of calibration certs | 100% | Mfr's std | Mfr's std | TC | | P, W | V | - | |
| | | Marking & Dimension | MA | Visual | 100% | Apprd drg/Tech.spec. | Apprd drg/Tech spec. | TC | | P, W | V | - | |

| PREPARED BY | APPROVED BY | LEGEND:<br>*RECORDS, IDENTIFIED WITH "TICK" SHALL BE ESSENTIALLY INCLUDED BY CONTRACTOR IN QA DOCUMENTATION<br>** M: MANUFACTURER/SUBCONTRACTOR C: CONTRACTOR/NOMINATED INSPN. AGENCY<br>N: NTPC INDICATE "**P**" PERFORM "**W**" WITNESS AND "**V**" VERIFICATION AS APPROPRIATE<br>"**CHP**" NTPC SHALL IDENTIFIED IN COLUMN "**N**" | FOR NTPC USE | DOCUMENT No. |
|---|---|---|---|---|
| SIGNATURE | | | REVIEWED BY | 4 OF 9<br>NAME & SIGN. OF APPROVING AUTHORITY & SEAL |

CR = Critical, MA = Major, MI = Minimum, TC = Test Certificate, P = Perform, W = Witness, V = Verification,

| | MANUFACTURERS NAME & ADRESS<br>*(AS PER NTPC APPROVED VENDOR LIST)* | STANDARD MANUFACTURING QUALITY PLAN<br>ITEM : **CONTROL VALVES**<br>SUB SYSTEM : | REV. : 00<br>DATE : 30.10.09 | PROJECT:2 X 600 MW SCCL TPP<br>CONTRACT No.: 381<br>CONTRACTOR: ***BHEL-PEM*** |
|---|---|---|---|---|

| Sl. No. | COMPONENT & OPERATION | CHARACTERISTICS | CLASS | TYPE OF CHECK | QUANTUM OF CHECK | REFERENCE DOCUMENT | ACCEPTANCE NORMS | FORMAT OF RECORDS | Agency D | Agency M | Agency C | Agency N | Remarks |
|---|---|---|---|---|---|---|---|---|---|---|---|---|---|
| 1 | 2 | 3 | 4 | 5 | 6 | 7 | 8 | 9 | 10 | | | | 11 |
| 2.0 | **IN PROCESS QUALITY CONTROL** | | | | | | | | | | | | |
| 2.1 | Body & Bonnet after machining & plug, Plug with Actuator Stem, | Surface Flaws<br>* MP FOR BODY & BONNET ONLY | MA | * MP/ PT<br>(*SEE NOTE 6) | All Accessible surface | ANSI B16.34 | ANSI B16.34 | Test Records(NDT) | | P | V | - | Butt weld shall be included |
| | | Dimensional check | MA | Measurement | 100% | Mfr's std | Mfr's std | Log sheets | | P | - | - | |
| | | Hardfacing wherever Applicable | MA | Hardness Meas. | Sample Pads | Mfr's std | Mfr's std | Records | | P | V | - | |
| | Guide Bush(Wherever applicable) | Dimensionsl | MI | Measurement | 100% | Appd drg | Appd Drg | Log sheet | | P | - | - | |
| | Lapping | Machining surface contact | MA | Blue Matching | 100% | ---------- | Proper Physical Contact | ---------- | | P | - | - | |

| PREPARED BY | APPROVED BY | LEGEND:<br>*RECORDS, IDENTIFIED WITH "TICK" SHALL BE ESSENTIALLY INCLUDED BY CONTRACTOR IN QA DOCUMENTATION<br>** M: MANUFACTURER/SUBCONTRACTOR C: CONTRACTOR/NOMINATED INSPN. AGENCY<br>N: NTPC INDICATE "**P**" PERFORM "**W**" WITNESS AND "**V**" VERIFICATION AS APPROPRIATE<br>"**CHP**" NTPC SHALL IDENTIFIED IN COLUMN "**N**" | FOR NTPC USE | DOCUMENT No. |
|---|---|---|---|---|
| SIGNATURE | | | REVIEWED BY | 5 OF 9<br>NAME & SIGN. OF APPROVING AUTHORITY & SEAL |

CR = Critical, MA = Major, MI = Minimum, TC = Test Certificate, P = Perform, W = Witness, V = Verification,

| | MANUFACTURERS NAME & ADRESS<br>(AS PER NTPC APPROVED VENDOR LIST) | STANDARD MANUFACTURING QUALITY PLAN<br>ITEM : **CONTROL VALVES**<br>SUB SYSTEM : | REV. : 00<br>DATE : 30.10.09 | PROJECT: 2 X 600 MW SCCL TPP<br>CONTRACT No.: 381<br>CONTRACTOR: ***BHEL-PEM*** |
|---|---|---|---|---|

| Sl. No. | COMPONENT & OPERATION | CHARACTERISTICS | CLASS | TYPE OF CHECK | QUANTUM OF CHECK | REFERENCE DOCUMENT | ACCEPTANCE NORMS | FORMAT OF RECORDS | Agency D | Agency M | Agency C | Agency N | Remarks |
|---|---|---|---|---|---|---|---|---|---|---|---|---|---|
| 1 | 2 | 3 | 4 | 5 | 6 | 7 | 8 | 9 | 10 | | | | 11 |
| 3.0 | **TESTS ON COMPLETED VALVES** | | | | | | | | | | | | |
| 3.1 | Actuator Chamber | Strength and Leakage | MA | Pneu test | 100% | ---------- | No leakage | TC | √ | P | W | W | |
| 3.2 | Body | Leak and Pr. Test | MA | Hydro test | 100% | ANSI B16.34 | ANSI B16.34 | TC | √ | P | W | W | |
| 3.3 | Seat leakage test for completed valve | Seat leakage | MA | Hydro test/pneumatic Test(As applicable) | 100% | ANSI B16.104 | Appd Data sheet/ANSI B16.104 | TC | √ | P | W | W | |
| 3.4 | Operation tests on completed valve | Valve Travel | MA | Measurement | 100% | As per spec & appd drgs | As per spec & appd drgs | TC | √ | P | W | W | |
| | | opening and closing time | MA | Measurement | 100% | As per spec and Appd drgs | As per spec and Appd drgs | TC | √ | P | W | W | |
| | | Linearity/CAM characteristics | MA | Measurement | 100% | As per spec and Appd drgs | As per spec and Appd drgs | TC | √ | P | W | W | |
| | | Hysterisis | MA | Measurement | 100% | | As per spec and Appd drgs | TC | √ | P | W | W | |

| PREPARED BY | APPROVED BY | LEGEND:<br>*RECORDS, IDENTIFIED WITH "TICK" SHALL BE ESSENTIALLY INCLUDED BY CONTRACTOR IN QA DOCUMENTATION<br>** M: MANUFACTURER/SUBCONTRACTOR C: CONTRACTOR/NOMINATED INSPN. AGENCY<br>N: NTPC INDICATE "**P**" PERFORM "**W**" WITNESS AND "**V**" VERIFICATION AS APPROPRIATE<br>"**CHP**" NTPC SHALL IDENTIFIED IN COLUMN "**N**" | FOR NTPC USE | DOCUMENT No. |
|---|---|---|---|---|
| SIGNATURE | | | REVIEWED BY | 6 OF 9<br>NAME & SIGN. OF APPROVING AUTHORITY & SEAL |

CR = Critical, MA = Major, MI = Minimum, TC = Test Certificate, P = Perform, W = Witness, V = Verification,

| | MANUFACTURERS NAME & ADRESS<br>*(AS PER NTPC APPROVED VENDOR LIST)* | STANDARD MANUFACTURING QUALITY PLAN<br>ITEM : **CONTROL VALVES**<br>SUB SYSTEM : | REV. : 00<br>DATE : 30.10.09 | PROJECT: 2 X 600 MW SCCL TPP<br>CONTRACT No.: 381<br>CONTRACTOR: ***BHEL-PEM*** |
|---|---|---|---|---|

| Sl. No. | COMPONENT & OPERATION | CHARACTERISTICS | CLASS | TYPE OF CHECK | QUANTUM OF CHECK | REFERENCE DOCUMENT | ACCEPTANCE NORMS | FORMAT OF RECORDS | Agency D | Agency M | Agency C | Agency N | Remarks |
|---|---|---|---|---|---|---|---|---|---|---|---|---|---|
| 1 | 2 | 3 | 4 | 5 | 6 | 7 | 8 | 9 | 10 | | | | 11 |
| 3.5 | CV test | Valve characteristics PR. Vs Discharge and Discharge Vs opening 0 to 100% in steps of 10%. | MA | Measurement | 1/type | As per spec and Appd drgs | As per spec and Appd drgs | TC | √ | P | V | V | * NTPC engg. Clearance for CV test shall be reviewed during final inspection. |
| 3.6 | Accessories | Operating of limit switch & solenoids and other accessories | MA | Measurement | 100% | As per spec and Appd drgs | As per spec and Appd drgs | TC | √ | P | W | W | CHP 'D' Accessories as per approved hook-up diagm |
| | | Predefined valve posn incase of Air failure | MA | Visual | 100% | As per spec and Appd drgs | As per spec and Appd drgs | TC | √ | P | W | W | |
| 3.7 | Final Inspn. | Overall Dimn. | MI | Visual & Dimension | 100% | Appd drgs | Appd drgs | Records | √ | P | W | W | |
| | | Cleanliness,Paining,stamping etc. | MA | Visual | 100% | As per spec and Appd drgs | As per spec & Appd drg. | Records | | P | V | - | |

*** in case CV tests have been carried out in the past and document generated, the same shall be furnished to the employer for approval**

| PREPARED BY | APPROVED BY | LEGEND: | FOR NTPC USE | DOCUMENT No. |
|---|---|---|---|---|
| SIGNATURE | | *RECORDS, IDENTIFIED WITH "TICK" SHALL BE ESSENTIALLY INCLUDED BY CONTRACTOR IN QA DOCUMENTATION<br>** M: MANUFACTURER/SUBCONTRACTOR C: CONTRACTOR/NOMINATED INSPN. AGENCY<br>N: NTPC INDICATE "**P**" PERFORM "**W**" WITNESS AND "**V**" VERIFICATION AS APPROPRIATE<br>"**CHP**" NTPC SHALL IDENTIFIED IN COLUMN "**N**" | **REVIEWED BY** | 7 OF 9<br>NAME & SIGN. OF APPROVING AUTHORITY & SEAL |

CR = Critical, MA = Major, MI = Minimum, TC = Test Certificate, P = Perform, W = Witness, V = Verification,

| | MANUFACTURERS NAME & ADRESS<br>*(AS PER NTPC APPROVED VENDOR LIST)* | STANDARD MANUFACTURING QUALITY PLAN<br>ITEM : **CONTROL VALVES**<br>SUB SYSTEM : | REV. : 00<br>DATE : 30.10.09 | PROJECT: 2 X 600 MW SCCL TPP<br>CONTRACT No.: 381<br>CONTRACTOR: ***BHEL-PEM*** |
|---|---|---|---|---|

| Sl. No. | COMPONENT & OPERATION | CHARACTERISTICS | CLASS | TYPE OF CHECK | QUANTUM OF CHECK | REFERENCE DOCUMENT | ACCEPTANCE NORMS | FORMAT OF RECORDS | Agency D | Agency M | Agency C | Agency N | Remarks |
|---|---|---|---|---|---|---|---|---|---|---|---|---|---|
| 1 | 2 | 3 | 4 | 5 | 6 | 7 | 8 | 9 | 10 | | | | 11 |
| 3.8 | **AUXILIARY ITEMS** | | | | | | | | | | | | |
| 1. | Positioner | Accuracy | MA | Measurement | 1/type | Mfg std | Mfg. std | TC | | P | V | - | |
| | | Top & Bottom Nozzle Nozzle leakage | MA | Leak test | -do- | -do- | -do- | TC | | P | V | - | |
| | | Overall leakage after assy. | MA | -do- | -do- | -do- | No leakage | TC | | P | V | - | |
| 2 | Air Filer Regulator | Normal Air consumption | MA | Measurement | 1/type | Mfg. std | No leakage | TC | | P | V | - | |
| | | Overall leakage | MA | Visual (Soap Solution) | 100% | Mfg. std | No leakage | TC | | P | V | - | |
| 3 | Air Lock Relay | Performance test | MA | Leakage test | 100% | Mfg. std | Mfg. std | TC | | P | V | - | |

| PREPARED BY | APPROVED BY | LEGEND:<br>*RECORDS, IDENTIFIED WITH "TICK" SHALL BE ESSENTIALLY INCLUDED BY CONTRACTOR IN QA DOCUMENTATION<br>** M: MANUFACTURER/SUBCONTRACTOR C: CONTRACTOR/NOMINATED INSPN. AGENCY<br>N: NTPC INDICATE "**P**" PERFORM "**W**" WITNESS AND "**V**" VERIFICATION AS APPROPRIATE<br>"**CHP**" NTPC SHALL IDENTIFIED IN COLUMN "**N**" | FOR NTPC USE | DOCUMENT No. |
|---|---|---|---|---|
| SIGNATURE | | | REVIEWED BY | 8 OF 9<br>NAME & SIGN. OF APPROVING AUTHORITY & SEAL |

CR = Critical, MA = Major, MI = Minimum, TC = Test Certificate, P = Perform, W = Witness, V = Verification,

| | MANUFACTURERS NAME & ADRESS<br>*(AS PER NTPC APPROVED VENDOR LIST)* | STANDARD MANUFACTURING QUALITY PLAN<br>ITEM : **CONTROL VALVES**<br>SUB SYSTEM : | REV. : 00<br>DATE : 30.10.09 | PROJECT: 2 X 600 MW SCCL TPP<br>CONTRACT No.: 381<br>CONTRACTOR: ***BHEL-PEM*** |
|---|---|---|---|---|

| Sl. No. | COMPONENT & OPERATION | CHARACTERISTICS | CLASS | TYPE OF CHECK | QUANTUM OF CHECK | REFERENCE DOCUMENT | ACCEPTANCE NORMS | FORMAT OF RECORDS | Agency D | Agency M | Agency C | Agency N | Remarks |
|---|---|---|---|---|---|---|---|---|---|---|---|---|---|
| 1 | 2 | 3 | 4 | 5 | 6 | 7 | 8 | 9 | 10 | | | | 11 |
| 4 | Electric Position transmitter | Performance/Movement of slide wire | MA | Operation | 100% | Mfg. std | Mfg. std | TC | | P | W, V | - | |
| | | Wiring connection. | MA | Continuity | 100% | Mfg. std | Mfg. std | TC | | P | V | - | |
| | | Cyclic test | MA | 10000 operation cycles | 1/type | Mfg. std | Mfg. std | TC | | P | V | - | |
| | | Accuracy | MA | Operation | 100% | Appd. Data sheets | Appd. Data sheets | TC | | P | W, V | - | |

Note:
1. IBR certificates in Form III C shall be submitted if called for in the specification "D"
2. Copies of all TC for materials duly correlated with Heat numbers, TC for electrical items and mechnical tests (Leak/Operation) shall be furnished to BHEL for verification and acceptance.
3. Material test certificates shall be offered for verification during final inspection.
4. 'D' – Documents to be provided as part of documentation pkg.
5. Sub-contractor for valve casting & accessories as per BHEL approval. No NTPC approval required.
6. * NDT Shall be as per ANSI B16.34.

| PREPARED BY | APPROVED BY | LEGEND:<br>*RECORDS, IDENTIFIED WITH "TICK" SHALL BE ESSENTIALLY INCLUDED BY CONTRACTOR IN QA DOCUMENTATION<br>** M: MANUFACTURER/SUBCONTRACTOR C: CONTRACTOR/NOMINATED INSPN. AGENCY<br>N: NTPC INDICATE "**P**" PERFORM "**W**" WITNESS AND "**V**" VERIFICATION AS APPROPRIATE<br>"**CHP**" NTPC SHALL IDENTIFIED IN COLUMN "**N**" | FOR NTPC USE | DOCUMENT No. |
|---|---|---|---|---|
| SIGNATURE | | | REVIEWED BY | 9 OF 9<br>NAME & SIGN. OF APPROVING AUTHORITY & SEAL |

CR = Critical, MA = Major, MI = Minimum, TC = Test Certificate, P = Perform, W = Witness, V = Verification,

# SECTION – D

# SPARES

## [A] LIST OF COMMISSIONING SPARES

| S.No. | ITEM DESCRIPTION | QUANTITY REQUIRED |
|---|---|---|
| 1 | Gaskets | One (1) set with each control valve Tag |
| 2 | Gland Packing | One (1) set with each control valve Tag |

## [B] LIST OF MANDATORY SPARES

| S. NO | ITEM DESCRIPTION | QUANTITIES FOR TWO UNITS |
|---|---|---|
| 1. | **Pneumatic Actuator Assembly** | **1 No. of each type** |
| 2. | **Valve Trim(including Cage, Plug, Stem, Seat rings, Guide Bushings etc.)** | **1 Set for each type of Control Valve** |
| 3. | **Diaphragms, O-Rings, Seals etc.** | **1 No. of each type and make** |
| 4. | **Pneumatic Air Filter/Regulator** | **10 % or 2 Nos. whichever is more of each type** |
| 5. | **Pressure Gauge** | **10 % or 2 Nos. whichever is more of all types, make & rating** |
| 6. | **Solenoid Valves** | **10 % or 2 Nos. whichever is more of each type** |
| 7. | **Pneumatic Relays** | **10 % or 2 Nos. whichever is more of each type** |
| 8. | **Position Feedback Transmitters** | **10 % or 2 Nos. whichever is more of each type** |
| 9. | **Positioner Unit(Complete Unit)** | **20 % or 2 Nos. whichever is more of each type** |
| 10. | **Airlock Relays** | **10 % or 2 Nos. whichever is more of each type** |

**NOTE :** - The Actual Quantity shall be worked out during detailed Engineering.

# SECTION – D

# SCHEDULE OF SUBMISSION OF DRAWINGS/DOCUMENTS

## SCHEDULE OF SUBMISSION OF DRAWINGS / DOCUMENTS, EQUIPMENT MANUFACTURE INSPECTION AND DESPATCH

| | | |
|---|---|---|
| 1. | **ZERO DATE** | **DATE of LOI / FOI / TOI** |
| 2. | Submission of Data Sheets / documents / catalogues / Valve sizing calculations / Noise calculations for approval. | 2 Weeks from the Zero date. |
| 3. | Technical finalisation, freezing of inputs of manufacture by way of vetting of documents and technical discussions and resubmissions of documents (if required) | 8 Weeks from the Zero date. |
| 4. | Inspection of Equipment as per Approved (Category-I) drawings / documents. | 18 Weeks from the Zero date. |
| 5. | Release of MDCC by BHEL | 20 Weeks from the Zero date. |
| 6. | Dispatch (Packaging & Dispatch) | 21 Weeks from the Zero date. |
| 7. | Final documents submission as per Contract | 22 Weeks from the Zero date. |

**NOTE**: Delays due to non-fulfillment of the requirements of approved Quality Plan and approved Data sheets; Drawings, Catalogues and Sizing Calculations observed during inspection shall be to the Vendor's account.

Delays due to INCOMPLETE (Partly) submission of Data sheets, Drawings, Catalogues and Sizing Calculations also be considered as **"DOCUMENTS NOT SUBMITTED"**

**(Signature and Stamp of the Bidder)**

**SINGARENI COLLIERIES COMPANY LIMITED**
**2 X 600 MW SINGARENI**

TECHNICAL SPECIFICATION
FOR

# CONTROL VALVES (WITHOUT FDV-14)

**WITH ACCESSORIES**
(Pneumatically Operated)

**VOLUME III**

SPECIFICATION No: **PE-TS-381-145-I 004**

BHARAT HEAVY ELECTRICALS LIMITED
POWER SECTOR
PROJECT ENGINEERING MANAGEMENT DIVISION
NOIDA, INDIA

# CONTENTS

## VOL-III


| S. No. | DESCRIPTION | No. of sheets |
|---|---|---|
| 1 | COMPLIANCE CERTIFICATE | 1 |
| 2 | SCHEDULE OF PRICES | 2 |
| 3 | SCHEDULE OF UNIT PRICES | 1 |
| 4 | CV TEST CHARGES | 1 |
| 5 | INSPECTION SCHEDULE | 1 |

**COMPLIANCE CERTIFICATE**
**For**
**Control Valve with accessories**
**(To be Signed & Stamped by the Bidder)**

**Project: Singareni TPP 2 X 600 MW - SCCL**

**Specification no.: PE-TS-381-145-I004**

**We shall comply with the following:-**

1. All the requirements as stated in Technical Specification / Specific Technical requirement / Data sheets / Drawings, BHEL quality plan etc as enclosed in the tender, shall be fully complied **without any deviation**.

2. BHEL Quality Plan (enclosed with the specification) duly signed and stamped is submitted herewith **without any deviation.**

3. Calculation of Cv, Noise level, Valve outlet velocity, Trim exit velocity, Actuator sizing, Data sheet-C in line with Data sheet-A of specification, dimensional drawings / edge preparation details, etc shall be submitted for BHEL/Customer review and approval, to reach BHEL within 15 days after receipt of LOI.

4. Selection of valves and Actuators are our (bidder's) responsibility. Any change in selection of type of valve and Actuators / Sizing / percentage opening, calculations, QP, etc., if desired by BHEL / Customer during approval of the documents after award of contract, without major changes in process parameters as per tender Specification, shall be carried out without any commercial implication and time delay.

5. Body material and Trim material combinations offered will be equivalent or better than the material specified in data sheet-A. Wherever Trim material combinations offered differ from the specification, its superiority shall be authenticated with documentary evidence and justification produced for BHEL / Customer's concurrence. BHEL / Customer reserves the right to accept/rejects any variation to the specification.

| | |
|---|---|
| Signature with date | |
| Name | |
| Company seal | |

# SCHEDULE OF PRICES

| S.NO | ITEM DESCRIPTION | | UNIT PRICE (Ex-Works) | TOTAL PRICE for TWO Units (Ex-works) |
|---|---|---|---|---|
| [A]CONTROL VALVES COMPLETE WITH PNEUMATIC ACTUATOR AND ALL THE ACCESSORIES | | | | |
| S. No. | TAG NO. | SERVICE | | |
| 1 | ASV-8 | D/A Pegging from Aux. Steam Header | | |
| 2 | CRHV-6 | D/A Pegging from CRH Line | | |
| 3 | CDV-22 & CDV-25 | Main Condensate Control | | |
| 4 | CDV-10, CDV-12 & CDV-14 | CEP A/B/C Minimum Recirculation | | |
| 5 | CDV-43 | Excess Dump Control | | |
| 6 | CDV-39 | GSC min. flow recirculation | | |
| 7 | CDV-67 | Condensate for Flash Tank-B | | |
| 8 | CDV-72 | Condensate for Valve Gland Sealing | | |
| 9 | DRV-53 | HPH-7A Normal Drain to HPH-6A | | |
| 10 | DRV-59 | HPH-7B Normal Drain to HPH-6B | | |
| 11 | DRV-56 | HPH-7A Alt Drain to F/T-A | | |
| 12 | DRV-62 | HPH-7B Alt Drain to F/T-B | | |
| 13 | DRV-2 | HPH-6A Normal Drain to HPH-5A | | |
| 14 | DRV-8 | HPH-6B Normal Drain to HPH-5B | | |
| 15 | DRV-5 | HPH-6A Alt Drain to F/T-B | | |
| 16 | DRV-11 | HPH-6B Alt Drain to F/T-B | | |
| 17 | DRV-15 | HPH-5A Drain to Deaerator | | |
| 18 | DRV-22 | HPH-5B Drain to Deaerator | | |
| 19 | DRV-18 | HPH-5A Alt Drain to F/T-A | | |
| 20 | DRV-25 | HPH-5B Alt Drain to F/T-A | | |
| 21 | DRV-28 | LPH-3 Normal Drain to LPH-2 | | |
| 22 | DRV-31 | LPH-3 Alt Drain to F/T-A | | |
| 23 | DRV-34 | LPH-2 Normal Drain to LPH-1 | | |
| 24 | DRV-37 | LPH-2 Alt. Drain to F/T-B | | |
| 25 | DRV-48 | Deaerator Overflow to F/T-A | | |
| 26 | DMV-19 | DM Normal MU to Hotwell | | |
| 27 | DMV-23 | DM Emergency MU to Hotwell | | |
| 28 | ECW-20 | TG-ECW System | | |
| 29 | ECW-83 | SG-ECW System | | |

| | | | | |
|---|---|---|---|---|
| **[B]** | 15 Meters of 10mm OD x 1.5mm thick PVC Coated annealed Cu. Tubing **(for each CV) (To be supplied Loose)** | | | |
| **[C]** | **FITTINGS: for each CV (To be Supplied Loose)** | **(i)** BRASS FITTING-Double Compression Type for Connection to Air Filter Regulator | | |
| | | **(ii)** BRASS FITTING- Double Compression Type for Connection to Solenoid Valve | | |
| | | **(iii)** BRASS FITTING- Double Compression Type for Connection to IA Header isolation vlv. | | |
| | | **(iv)** BRASS TEE | | |
| **[D]** | **START-UP/COMMISSIONING SPARES :** ( TOTAL PRICE FOR 1 SETS OF BODY AND BONNET GASKET & 1 SETS OF GLAND PACKINGS PER CV ) | | | |
| **[E]** | **MANDATORY SPARES** | | | |
| **[F]** | **DIAGNOSTIC SOFTWARE**: Software for diagnostic & configuration with facility of configuring all valve tags in a unit through polling & without any change in wiring. | | | |
| **[G]** | **CV TEST CHARGES (ONE PER TYPE PER SIZE, CV VALUE. TAG NOS. TO BE GROUPED ACCORDINGLY AND INDICATED. )** | | | |
| **[H]** | **DOCUMENTATION CHARGES FOR THE FINAL DOCUMENTS & SOFT COPIES.** | | | |

| **PARTICULARS OF THE BIDDER / AUTHORISED REPRESENTATIVE** | | | | |
|---|---|---|---|---|
| | | | | |
| NAME | DESIGNATION | SIGNATURE | DATE | COMPANY SEAL |

# UNIT PRICES

**CONTROL VALVE ACCESSORIES**

| S. No. | ITEMS | UNIT PRICE (Ex-Works) |
|---|---|---|
| 1. | SMART POSITIONER (EACH TYPE) | |
| 2. | VALVE TRIM OF EACH TYPE (Separate list to be attached if required) | |
| 3. | DIAPHRAGMS,O-RINGS,SEALS ETC OF ALL TYPE,MAKE ETC | |
| 4. | AIR FILTER REGULATORS | |
| 5. | AIR LOCK RELAY | |
| 6. | POSITION LIMIT SWITCH | |
| 7. | VOLUME BOOSTER | |
| 8. | PNEUMATIC RELAY | |
| 9. | SOLENOID VALVE | |
| 10. | E/P CONVERTER | |
| 11. | PRESSURE GAUGES OF EACH TYPE | |
| 12. | JUNCTION BOX (24 WAYS) | |
| 13. | HANDWHEEL | |
| 14. | HART CALIBRATOR | |
| 15. | PERSONAL COMPUTER ( INDUSTRIAL GRADE ) | |
| 16. | SOFTWARE FOR POSITIONER(DIAGONOSTIC) | |
| 17. | HARDWARE FOR CONNECTION B/W PC & CV POSITIONER (RS-232/485 CONVERTER, MULTIPLEXER & HART MODEM, ETC.) | |
| 18. | ACTUATOR OF EACH TYPE (Separate list to be attached if required) | |
| 19. | BRASS FITTING FOR CONNECTION TO AIR FILTER REGULATOR | |
| 20. | BRASS FITTING FOR CONNECTION TO SOLENOID VALVE | |
| 21. | BRASS FITTINGS FOR CONNECTING TO AIR HEADER | |
| 22. | EQUAL COPPER TEE | |
| 23. | BRASS TEE | |
| 24. | COPPER TUBING PER METRE | |
| 25. | POSITION FEEDBACK TRANSMITTERS | |

**PARTICULARS OF THE BIDDER / AUTHORISED REPRESENTATIVE**

| | | | | |
|---|---|---|---|---|
| | | | | |
| | | | | |
| NAME | DESIGNATION | SIGNATURE | DATE | COMPANY SEAL |

# CV TEST CHARGES

| S.NO | ITEM DESCRIPTION | | QTY | CV TEST CHARGES (Ex-works) |
|---|---|---|---|---|
| | TAG NO. | SERVICE | | |
| 1 | ASV-8 | D/A Pegging from Aux. Steam Header | 01 | |
| 2 | CRHV-6 | D/A Pegging from CRH Line | 01 | |
| 3 | CDV-22 & CDV-25 | Main Condensate Control | 01 | |
| 4 | CDV-10, CDV-12 & CDV-14 | CEP A/B/C Minimum Recirculation | 01 | |
| 5 | CDV-43 | Excess Dump Control | 01 | |
| 6 | CDV-39 | GSC min. flow recirculation | 01 | |
| 7 | CDV-67 | Condensate for Flash Tank-B | 01 | |
| 8 | CDV-72 | Condensate for Valve Gland Sealing | 01 | |
| 9 | DRV-53 | HPH-7A Normal Drain to HPH-6A | 01 | |
| 10 | DRV-59 | HPH-7B Normal Drain to HPH-6B | 01 | |
| 11 | DRV-56 | HPH-7A Alt Drain to F/T-A | 01 | |
| 12 | DRV-62 | HPH-7B Alt Drain to F/T-B | 01 | |
| 13 | DRV-2 | HPH-6A Normal Drain to HPH-5A | 01 | |
| 14 | DRV-8 | HPH-6B Normal Drain to HPH-5B | 01 | |
| 15 | DRV-5 | HPH-6A Alt Drain to F/T-B | 01 | |
| 16 | DRV-11 | HPH-6B Alt Drain to F/T-B | 01 | |
| 17 | DRV-15 | HPH-5A Drain to Deaerator | 01 | |
| 18 | DRV-22 | HPH-5B Drain to Deaerator | 01 | |
| 19 | DRV-18 | HPH-5A Alt Drain to F/T-A | 01 | |
| 20 | DRV-25 | HPH-5B Alt Drain to F/T-A | 01 | |
| 21 | DRV-28 | LPH-3 Normal Drain to LPH-2 | 01 | |
| 22 | DRV-31 | LPH-3 Alt Drain to F/T-A | 01 | |
| 23 | DRV-34 | LPH-2 Normal Drain to LPH-1 | 01 | |
| 24 | DRV-37 | LPH-2 Alt. Drain to F/T-B | 01 | |
| 25 | DRV-48 | Deaerator Overflow to F/T-A | 01 | |
| 26 | DMV-19 | DM Normal MU to Hotwell | 01 | |
| 27 | DMV-23 | DM Emergency MU to Hotwell | 01 | |
| 28 | ECW-20 | TG-ECW | 01 | |
| 29 | ECW-83 | SG-ECW | 01 | |

**NOTE:**

a) CHARGES TO BE INDICATED AGAINST EACH TAG NO.

b) CV TEST TO BE CONDUCTED FOR ONE PER TYPE PER SIZE, CV VALUE. TAG NOS. TO BE GROUPED ACCORDINGLY AND INDICATED.

# INSPECTION SCHEDULE

(PLACE & ADDRESS OF TESTING/ INSPECTION AND ITS SCHEDULE DATE & DURATION IN NUMBER OF DAYS ITEM/COMPONENTWISE TO BE LISTED)

| **PARTICULARS OF THE BIDDER / AUTHORISED REPRESENTATIVE** | | | | |
|---|---|---|---|---|
| | | | | |
| NAME | DESIGNATION | SIGNATURE | DATE | COMPANY SEAL |